WANG LABORATORIES, INC.

SUSTAINING ENGINEERING GROUP

ONE INDUSTRIAL AVE, LOWELL MA. 01851

DATE: OCTOBER 8, 1992

TO: S. RAMAKRISHNAN

COMPANY: DATAMATICS LIMITED

FAX #: 011 91 (22) 8366368

FROM: MIKE BAHIA

M/S: 019-690

TELEPHONE # (508) 656-0256
FAX# (508) 967-[redacted]2125
DEPT: 015

#OF PAGES(INCLUDING COVER): 2

FAX COVER SHEET

FAX MEMO

TO: *S. Ramakrishnan*
Datamatics Limited
Bombay, India

FROM: *Mike Bahia*
M/S 019-690
Wang Laboratories
1 Industrial Avenue
Lowell, MA 01851

SUBJECT: Source Code for MVP Basic-2 Operating System Release 3.4/3.5

DATE: *October 7, 1992*

Thanks for your quick response. We have been moved to a new location within the Towers and the old labs no longer exist. Any help you can provide in getting us a copy of the source code for either or both release 3.4 or 3.5 is greatly appreciated. Again I am sorry we have had to involve you in this. Thanks once more for your co-operation. Please let me know if you need me to do anything.

Best regards,
Mike Bahia
2200 Product Support
508-656-0256/FAX 508-967-2125

0008D

Datamatics Ltd.

Unit No. 38/39 SL. SEEPZ
Andheri (E) Bombay-400 096. INDIA
Tel: +91 (22) 6320511 @ 6324235
6324236 @ 6324237
Telex: 011-79064 'DCSP IN'
Fax: +91 (22) 6368368

6th October 1992 Fax # 001 508 967 2125

To

Mr. Mike Bahia
M/S 019-690
Wang Labs
1 Industrial Avenue
Lowell, MA 01851

Dear Mr. Bahia,

SUB : Source Code for MVP Basic-2 Operating System Release 3.4/3.5

REF : Your fax dated 5th October 1992

I am unable to make a copy of Basic-2 source code because our MVP System is no more in operation. However, I am having a copy of Basic-2 source code either Rel 3.4 or 3.5 in our archives. I have requested my Operations Manager to locate the disk platters containing the source code for Basic-2.

We had shipped Basic-2 Rel 3.5 on 22nd July 1991 to Mr. Michael Riley. I suggest that you should look for the disk platters in the Tower Two Labs apart from Mr. Riley's office. I assure of our full co-operation in locating the source code for Basic-2 operation system.

Thanking you and warm regards,

S. RAMAKRISHNAN
(Divisional Manager)

FAX MEMO

TO: *S. Ramakrishnan*
Datamatics Limited
Bombay, India

FROM: *Mike Bahia*
M/S 019-690
Wang Laboratories
1 Industrial Avenue
Lowell, MA 01851

SUBJECT: Source Code for MVP Basic-2 Operating System Release 3.4/3.5

DATE: *October 5, 1992*

I am the Product Support Engineer for the 2200 Product line at Wang Laboratories in Lowell, MA under Sustaining Engineering, Mike Runge, Director. Mike reports to Don Casey, head of R&D. Currently we are trying to organize all source code for all products currently supported. The plan is to have 1 specific location in house and 1 off site where all source code will be stored. Mike Riley, who was the focal point for you at Wang when you did the bug fixes on O/S release 3.4 to create 3.5 is no longer with us. At this time we have been unable to locate the source code for either O/S 3.4 or 3.5. We are hoping that if you still have copies of the source code for these 2 operating systems that you could forward copies to us. If this is agreeable the preferred media would be either 1.2 Meg 5 1/4" DSDD floppy disk or DS Tape Cassette. If Phoenix disk packs must be used that is agreeable.

Please let us know if you can help us with our request. If there are any issues that must be resolved please let me know what they are. We are very sorry to have to involve you on this matter and would greatly appreciate any help you could provide. Thank you very much for your time. I will look forward to your response. The best way to reach me is by FAX.

My FAX number is: *508-967-2125*

Regards,
Mike Bahia
2200 Product Support
508-656-0256/FAX 508-967-2125

0008D

FAX MEMO

TO: *S. Ramakrishnan*
Datamatics Limited
Bombay, India
FAX 011 91 22 836 6368

FROM: *Mike Bahia*
M/S 019-690
Wang Laboratories
1 Industrial Avenue
Lowell, MA 01851

SUBJECT: *Source Code for MVP Basic-2 Operating System Release 3.4/3.5*

DATE: *October 30, 1992*

The Phoenix cartridge with the 3.4 Source code and the 5 1/4" diskettes with the 3.5 Source code arrived this week. Thank you ever so much for your efforts and co-operation. We are very greatful.

Best regards,
Mike Bahia
2200 Product Support
508-656-0256/FAX 508-967-2125

0008D

FAX MEMO

TO: *S. Ramakrishnan*
Datamatics Limited
Bombay, India

FROM: *Mike Bahia*
M/S 019-690
Wang Laboratories
1 Industrial Avenue
Lowell, MA 01851

SUBJECT: Source Code for MVP Basic-2 Operating System Release 3.4/3.5

DATE: *October 5, 1992*

I am the Product Support Engineer for the 2200 Product line at Wang Laboratories in Lowell, MA under Sustaining Engineering, Mike Runge, Director. Mike reports to Don Casey, head of R&D. Currently we are trying to organize all source code for all products currently supported. The plan is to have 1 specific location in house and 1 off site where all source code will be stored. Mike Riley, who was the focal point for you at Wang when you did the bug fixes on O/S release 3.4 to create 3.5 is no longer with us. At this time we have been unable to locate the source code for either O/S 3.4 or 3.5. We are hoping that if you still have copies of the source code for these 2 operating systems that you could forward copies to us. If this is agreeable the preferred media would be either 1.2 Meg 5 1/4" DSDD floppy disk or DS Tape Cassette. If Phoenix disk packs must be used that is agreeable.

Please let us know if you can help us with our request. If there are any issues that must be resolved please let me know what they are. We are very sorry to have to involve you on this matter and would greatly appreciate any help you could provide. Thank you very much for your time. I will look forward to your response. The best way to reach me is by FAX.

My FAX number is: *508-967-2125*

Regards,
Mike Bahia
2200 Product Support
508-656-0256/FAX 508-967-2125

0008D

Datamatics Ltd.

Unit No. 38/39 SDF II, SEEPZ
Andheri (E), Bombay-400 096. INDIA
Tel: 91 (22) 8320511 ◎8324236
8324238 ◎8324237
Tlx : 011-79084 DCSP IN
Fax : 91 (22) 6368308

15th October 1992 Fax # 001 508 967 2125

Mr. [redacted] Bahia
M/S 019-690
Wang Lboratories
1 Industrial Avenue
Lowell
MA 01851
U.S.A.

Dear Mr. Bahia,

SUB : Shipment of Phoenix Disk Platter And Diskettes

REF : Your Fax Dated 5th October 1992

I have shipped one phoenix disk platter containing Basic-2 operating system Rel 3.4 and 35 5 1/4", 360 KB diskettes containing Basic-2 operating system Rel 3.5. I would suggest that you should get the disk platter cleaned and checked by Customers Service Engineer before you mount the same on a disk drive.

Since our MVP system is not in operation, we have not made any copies of these software releases. Kindly ensure that these volumes are secured. The shipment details are as follows :

Carrier	:	Swiss Air
Flt. No.	:	SR 197
Date of Flt	:	17th October 1992
Airway Bill No.	:	085-9276 2795

Please acknowledge the receipt of this shipment.

Thanking you and warm regards,

S. RAMAKRISHNAN
(Divisional Manager)

D amatics Limited

Unit No. 38/3 II, SEEPZ, Andheri (E), Bombay-400 096. India.
Tel. : +91 (22) 6320511, 6 36-6-7, Telex : 011-79064 'DCSP IN' Fax : +91 (22) 6366368

FACSIMILE CORRESPONDENCE

TO : MR. MICHAEL RILEY (MS 014-690) 70524 Fax : 508-452-0896
WANG LABS, LOWELL, USA

CC : MR. JIM NIHAN (MS 012-130)
MR. PRADEEP BARTHAKUR (MS 019-690)
MS. TERRI INCA (MS 014-A3A)
LABS, LOWELL, USA

: RAMAKRIS N, DATAMATICS LIMITED, BOMBAY

DATE : JUN

: SO MAINTENANCE ON MVP BASIC-2 OPERATING SYSTEM RELEASE 3.4

REF : PURCHASE ORDER NO. U4 W279291

1 WE RECEIVED THR ERS CONTAINING MCP BASIC-2 OS RELEASE 3.4 SOURCE 4" DSDD DISKETTE FOR TESTING THE LIMITS BUG AND DOCUMENTATION (3 VOLUMES).

DERSTAND THAT THERE ARE TWO OUTSTANDING BUGS TO BE FIXED BASIC-2 OIS RELEASE 3.4.

PROBLEM 1 THE PRINTER DRIVER THUS ASSIGNED TO A TERMINAL WORK IF THE TASK IS A BACKGROUND PRINT FUN TO A TERMINAL PRINT PORT 204.

PROBLEM 2 LIMITS STATEMENT ON A PROGRAM FILE THUS ARRANGED IS A NEW CS386 FORMAT - VLSI, MOVE T/DXX, TO T/DXX SHOULD RECOGNISE CS386 FILE TYPE 40.

3. WE ARE SETTING UP OUR MVP SYSTEM FOR FIXING THE ABOVE MENTIONED BUGS. WE WILL KEEP YOU POSTED ABOUT THE PROGRESS.

4. PLEASE VERIFY WHETHER THE PURCHASE ORDER NO. U4 W27921 DATED APRIL 30 1990 WHICH WE HAD RECEIVED EARLIER RELATES TO THIS ASSIGNMENT.

REGARDS, FAX 011 91 22 ~~6~~ 8 36 6368

(S. RAMAKRISHNAN)

Datamatics Limited

Unit No. 38/39, SDF II, SEEPZ, Andheri (E), Bombay-400 096. India.
Tel : +91 (22) 6320511, 6324235-6-7, Telex : 011-79064 'DCSP IN' ● Fax : +91 (22) 6366368

FACSIMILE CORRESPONDENCE

No. of pages: 5

TO : MR. MICHAEL RILEY
WANG LABORATORIES INC., LOWELL, U.S.A.
~~(M/S : 014-690)~~ 70524

FAX NO: 508-458-0620

CC : MR. PRADEEP BARTHAKUR (M/S 019-058)
MS. [illegible] INCA (M/S 014-A3A)
WANG LABORATORIES INC., LOWELL, U.S.A.

FROM : S. RAMAKRISHNAN

DATE : NOVEMBER 26, 1990

SUB : 2600 MICRO[illegible] DEVELOPMENT SYSTEM

REF : OUR FAX [illegible] NOVEMBER, 1990

---

1. [illegible] STILL HAVING PROBLEMS WITH 2600 MICROCODE DEVELOPMENT SYSTEM. DURING DEBUG SYSTEM SET UP THE PROGRAMME "2600 MDU" [illegible] TO COMMUNICATE WITH 2250 AT THE ADDRESS 0FA (PLEASE REFER [illegible] THE DIAGRAM ATTACHED). [illegible] KEYIN STATEMENT GETS X'[illegible] FROM [illegible] AS RESPONSE. APPARENTLY THERE IS NO COMMUNICATION TAKING [illegible] BETWEEN 2150 (AT ADDRESS 0FA) IN THE HOST SYSTEM AND THE [illegible] (AT ADDRESS 0FF) IN THE TARGET SYSTEM.

2. THERE ARE 2 DIP SWITCHES SW1 AND SW2 ON THE MDU BOARD (T112). PLEASE LET US KNOW THE CORRECT SETTINGS FOR THESE DIP SWITCHES.

3. PLEASE REFER TO THE SHEETS, "2600 MICROCODE DEVELOPMENT SYSTEM" AND "ORDER OF BOARDS IN THE CPU OF THE TARGET SYSTEM OF THE 2600 MICROCODE DEVELOPMENT SYSTEM". THERE IS A STATEMENT, "A JUMPER ON THE 2600 MOTHER BOARD IS ADDED FOR DISABLING CONTROL MEMORY" IN "2600 MICROCODE DEVELOPMENT SYSTEM". IS THE JUMPER SAME AS 16 PIN RIBBON CABLE INDICATED IN "ORDER OF THE BOARDS IN CPU OF THE TARGET SYSTEM OF THE 260 MICROCODE DEVELOPMENT SYSTEM?".

WE WOULD VERY MUCH APPRECIATE AN EARLY RESPONSE FROM YOU IN THIS REGARD.

WARM REGARDS,

S. RAMAKRISHNAN

Sent on 26/11
Mr.

WANG LABORATORIES INC

2600 MICROCODE DEVELOPMENT SYSTEM
January 11, 1977
Revised October 21, 1979

I. SYSTEM DESCRIPTION

The 2600 MDS is a combination of hardware and software that provides the user with convenient 2600 microcode debug capability. Registers, data, and instructions within the 2600 can be examined and modified. Execution can be started and stopped at specified instructions or single stepped, and register dumps can be performed at specified instructions.

The 2600 MDS hardware consists of a debug system coupled to a modified 2600. The debug system is a standard 64K 2200VP or 2200MVP with a 56K partition, a terminal with a 24x80 CRT, and two 2250's. The working 2600 is a standard 2600 with CRT, keyboard, disk, 2250 and at least 24K of control memory. One of the control memory boards is replaced by the MDB (microcode development unit) board and a jumper on the 2600 motherboard is added for disabling control memory. Typically, the 2250's are multiplexed to a floppy disk and to a 10 MB disk.

The debug 2200 may optionally be equiped with an MDU clock, which is used for execution timing. The MDU clock is a 2228B controller loaded with a timer microprogram. The MDU clock is connected to the MDU board in the 2600.

ONE INDUSTRIAL AVENUE LOWELL MASSACHUSETTS 01851 • TEL (617) 851-4111 • TWX 710-343-6769 • TELEX 94-7421

WANG LABORATORIES, INC.

2600 MICROCODE DEVELOPMENT SYSTEM
January 11, 1977
Revised October 21, 1979

I. SYSTEM DESCRIPTION

The 2600 MDS is a combination of hardware and software that provides the user with convenient 2600 microcode debug capability. Registers, data, and instructions within the 2600 can be examined and modified. Execution can be started and stopped at specified instructions or single-stepped, and register dumps can be performed at specified instructions.

The 2600 MDS hardware consists of a debug system coupled to a modified 2600. The debug system is a standard 64K 2200VP or 2200MVP with a 56K partition, a terminal with a 24x80 CRT, and two 2250's. The working 2600 is a standard 2600 with CRT, keyboard, disk, 2250 and at least 24K of control memory. One of the control memory boards is replaced by the MDU (microcode development unit) board and a jumper on the 2600 motherboard is added for disabling control memory. Typically, the 2200's are multiplexed to a floppy disk and to a 10 MB disk.

The debug 2200 may, optionally be equiped with an MDU clock, which is used for execution timing. The MDU clock is a 2200B controller loaded with a timer microprogram. The MDU clock is connected to the MDU board in the 2600.

HOST

TARGET

DEBUG SYSTEM

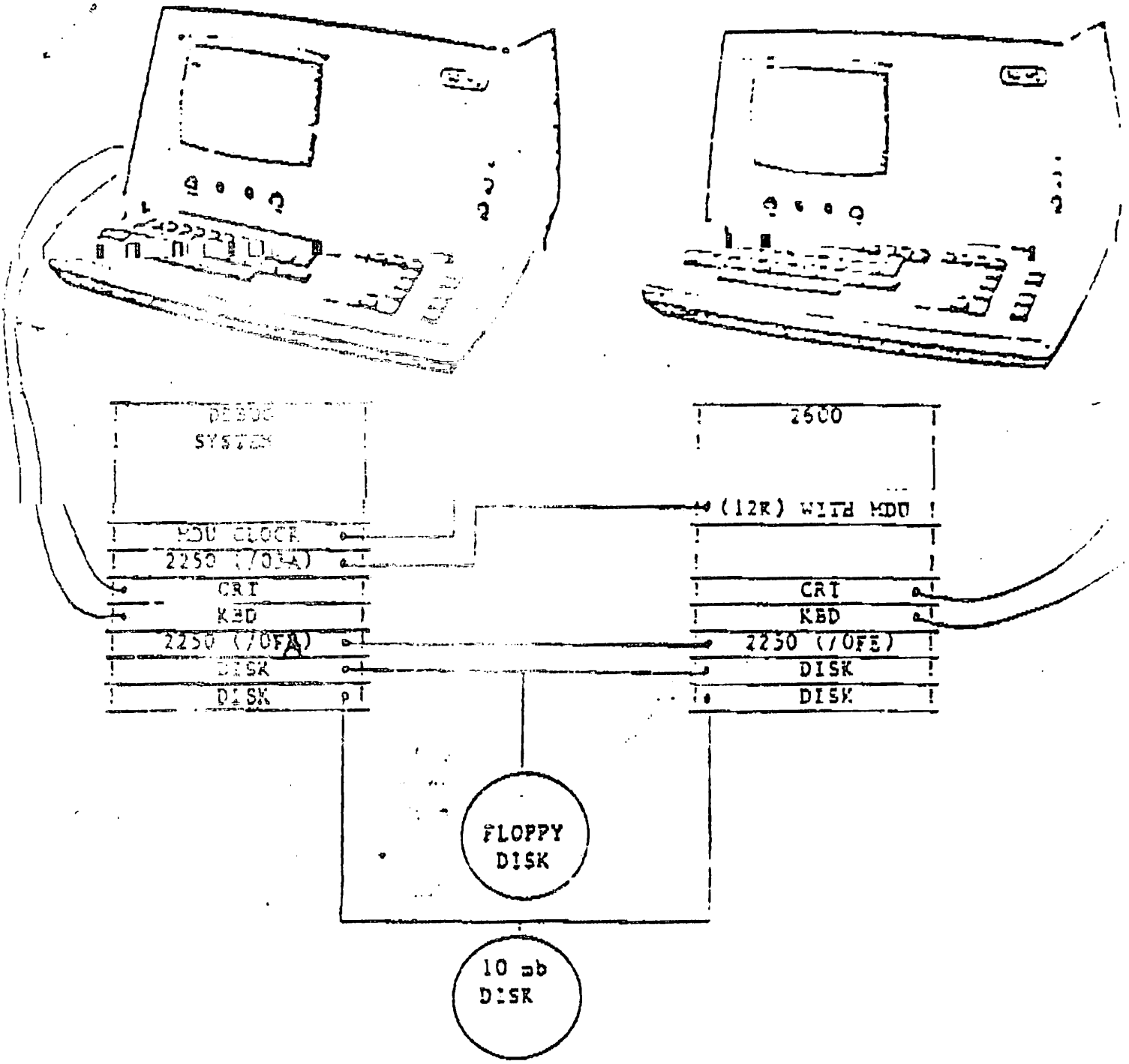

Order of Boards in the CPU of the TARGET System of the 2600 Microcode Development System

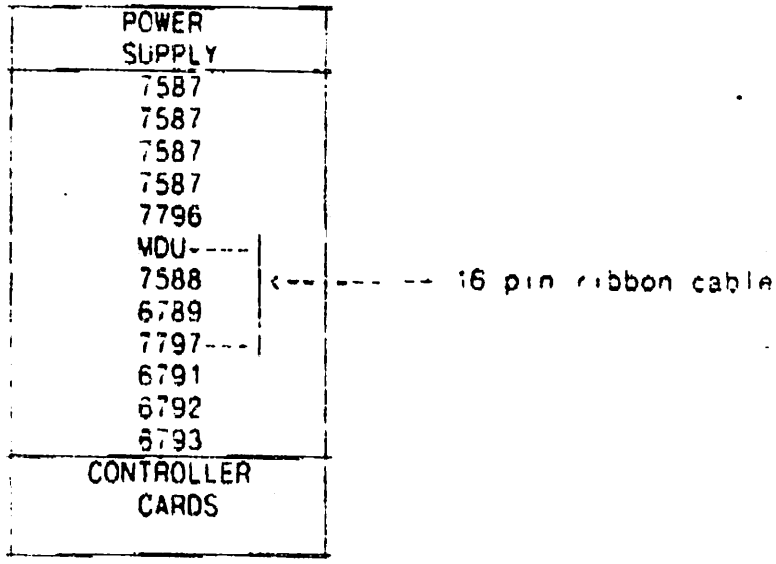

Datamatics Limited

Unit No. 38/39, SDF II, SEEPZ, Andheri (E), Bombay-400 096. India.
Tel : +91 (22) 6320511, 6324235-6-7, Telex : 011-79064 'DCSP IN' ● Fax : +91 (22) 6366368

FACSIMILE CORRESPONDENCE

TO : MR. MICHAEL RILEY (MS 014-690) FAX : 508-458-0620
WANG LABORATORIES INC., LOWELL, USA

FROM : S. RAMAKRISHNAN, DATAMATICS LIMITED, BOMBAY

: MR. PRADEEP BARTHAKUR (MS 019-690)
MS. TERRI INCA (MS 014-A3A)
WANG LABORATORIES INC., LOWELL, USA

DATE : JULY 23, 1990

: SOFTWARE MAINTENANCE OF MVP BASIC-2 OS REL 3.4

: YOUR PURCHASE ORDER NO. U4 W279291
YOUR FAX DATED JULY 16, 1990

1. OUR MVP SYSTEM IS NOW FULLY OPERATIONAL. OUR SOFTWARE ENGINEERS ARE STUDYING BASIC-2 OS REL 3.4 SOURCE CODE.

WE ARE IN THE PROCESS OF DUPLICATING THE PRINTER DRIVER BUG.

2. WE ARE AWAITING YOUR SHIPMENT OF THE FILE REQUIRED TO REPRODUCE AND TEST THE 'LIMITS' BUG ON 8" SSSD HARD SECTORED DISKETTE.

Bug 2

3. WE WOULD MUCH APPRECIATE YOUR CONCERN REGARDING THE PROGRESS OF THIS PROJECT. THE SHIPMENT OF DISK PLATTERS CONTAINING MVP BASIC-2 RELEASE 3.4 SOURCE CODE WAS DISPATCHED BY WANG LABORATORIES INC ON JUNE 1, 1990 AND, RECEIVED BY US ONLY ON JUNE 19, 1990.

4. WE ASSURE YOU OF NECESSARY SUPPORT FOR THE MAINTENANCE OF MVP SOFTWARE FROM BOMBAY.

WARM REGARDS,

(S. RAMAKRISHNAN)

To: Mr. Michael Riley (M/S 014-690)

From: S. Ramakrishnan

Date: 17 Sept., 1990

Sub: Status of 2258 L.C.O maintenance

---

1. Accomplishment during last week: I have investigated a few of the bugs reported. Please refer to the attached sheet for further information.

2. Plan for the current week: I plan to continue with the investigation of remaining bugs.

3. Requirement: I request a print be attached to MVP 2200.

4. Software test environment:

VS/OS Version:	07.30.02
VS/2200 Server Version:	01.00.14
BASIC - 2 OS Version:	03.03.06
2200/VS Services Version:	1.A

Status of 2258 LCO maintenance

17 Sept., 1990

S.No.	Bug No.	Status	Estimated date of completion	Remarks
1.	P200006911	Open	Investigating	Please refer to Documentation Note 1.
2.	P40F403145	Open		
3.	P50F502664	Closed	-	Can not be duplicated! Returns correct error code for invalid combinations of Volume/Library/File. Please refer to Documentation Note 2.
4.	P50F502732	Open		
5.	P10F226684	Open	Investigating	
6.	P10F227710	Duplicated		Can write in some protected numeric fields and beyond!
7.	P200006910	Open		
8.	P30F301769	Open		
9.	P50F501407	Closed	-	Can not be duplicated!
10.	P50F501474	Duplicated	Documentation error	File designator #3 is used by subroutine '199. Please refer to Documentation Note 3.
11.	P50F501716	Closed	-	Can not be duplicated!

Documentation Note:

1. The parameter, "V6 = Time out for hold (in seconds)", listed in the header of "VSACESS0", does not appear in the 2200/VS Local Communication Option Programmer's Reference Guide (Table 3-3, Page 3-7).

2. The return code, "V0$ = A5 (Error in SMB block)", is not listed in the Appendix A (Table A-1, Page A-2) of the 2200/VS Local Communication Option Programmer's Reference Guide .

Since the error codes returned by 2258 L.C.O subsystem are in hexadecimal, I suggest that the error codes be listed in hexadecimal in the 2200/VS Local Communication Option Programmer's Reference Guide.

3. The 2258 interface subroutine '199 and the file designator #3 used by the subroutine '199 are not mentioned in the 2200/VS Local Communication Option Programmer's Reference Guide; but the calling routine is expected to "SELECT #3/(Platter Address)"!

4. The error codes displayed by VS/2200 Server are not listed in the 2200/VS Local Communication Option Programmer's Reference Guide.

To: Mr. Michael Riley (M/S 014-690)

CC: Mr. Bill Hsien (M/S 014-A3A)
Mr. Ray Turcotte (M/S 014-A3A)

From: S. Ramakrishnan

Date: 15 Oct., 1990

Sub: Status of 2258 L.C.O maintenance

---

1. Accomplishment during last week: I investigated the following problems:

(a) Problem No. P10F227710: This fix prevents writing over protected numeric field.

(b) INSERT blows up WS emulation: Depressing INSERT key on DW keyboard in VS workstation emulation mode highlights protected numeric field with a pseudo blank as the first character. Further depression of return key blows up emulation. This fix corrects the problem.

(c) DELETE highlights protected numeric field: Depressing DELETE key on DW keyboard highlights protected numeric field. This fix corrects the problem.

(d) ERASE highlights protected numeric field with pseudo blanks: Depressing ERASE key on DW/DE keyboard highlights protected numeric field with pseudo blanks. This fix corrects the problem.

(e) Problem No. P30F301769: INDEXED READ NEXT (GOSUB '110) and TESTIDX1 have been modified to return correct key mask in V4$

(f) Problem No. P200006910: The BASIC function LEN does not count the trailing spaces. The LEN function along with STR function (eg. V1 = LEN(STR(A$()))) returns the length of the entire array, not just the length of the record. The INDEXED WRITE subroutine (GOSUB '111) or the CONSECUTIVE WRITE subroutine (GOSUB '104) does not accept the record length as an input parameter at present.

I have started documenting the changes.

2. Plan for the current week: I plan to continue with the investigation and fixing of the remaining problems and, with documentation.

3. Software test environment:

VS/OS Version:	07.30.02
VS/2200 Server Version:	01.00.14
BASIC - 2 OS Version:	03.03.06
2200/VS Services Version:	1.A

Status of 2258 LCO maintenance

15 Oct., 1990

S.No.	Bug No.	Status	Estimated date of completion	Remarks
1.	P200006911	Duplicated	Documentation error; may be VS/2200 Server error?	Please refer to Documentation Note 1.
2.	P40F403145	Closed	-	Please refer to Documentation Note 2.
3.	P50F502664	Closed	-	Can not be duplicated! Returns correct error code for invalid combinations of Volume/Library/File. Please refer to Documentation Note 3.
4.	P50F502732	Closed	Operator error	Works as documented (or designed?); please refer to Documentation Note 4.
5.	P10F226684	Open	19 Oct., 1990	Under investigation.
6.	P10F227696	Closed	-	32 VDISKs can be opened; but 32nd VDISK can not be closed.
7.	P10F227710	Closed	-	This problem has been fixed. Please refer to the cover page.
8.	P200006910	Duplicated	19 Oct., 1990	Please refer to the cover page

S.No.	Bug No.	Status	Estimated date of completion	Remarks
9.	P30F301769	Closed	-	This problem has been fixed.
10.	P50F501407	Closed	-	Can not be duplicated
11.	P50F501474	Duplicated	Documentation error	File designator #3 is used by subroutine '199. Please refer to Documentation Note 5.
12.	P50F501716	Closed	-	Can not be duplicated

Documentation Note:

1. The parameter, "V6 = Time out for hold (in seconds)", listed in the header of "VSACESS0", does not appear in the 2200/VS Local Communication Option Programmer's Reference Guide (Table 3-3, Page 3-7).

The header for file attributes, V9$() returned by General Open ('101) and Get File Attributes ('203) subroutines are different:

General Open - Header:
- 2 bytes of data count
- 62 bytes of attribute data
  - 1 byte Block header (X'01)
  - 2 bytes of count
  - Attribute data

Get File Attributes - Header
- 1 byte of word count (X'00)
- 2 bytes of byte count
- 62 bytes of attribute data
  - 1 byte Block header (X'01)
  - Attribute data

The code for file organization returned by both the subroutines for alternate indexed file is "A"(X'41); this is a valid code for alternate indexed file (refer to "RO Pack Reference Manual") not mentioned in the 2200/VS Local Communication Option Programmer's Reference Guide.

The subroutines do not seem to return correct attribute data fields for alternate keys. (May be VS/2200 Server error?)

2. This problem could not be reproduced as reported earlier. I was able to create successfully consecutive, indexed and relative files with number of records exceeding 20,000.

3. The return code, "V0$ = A5 (Error in SMB block)", is not listed in the Appendix A (Table A-1, Page A-2) of the 2200/VS Local Communication Option Programmer's Reference Guide .

Since the error codes returned by 2258 L.C.O subsystem are in hexadecimal, I suggest that the error codes be listed in hexadecimal in the 2200/VS Local Communication Option Programmer's Reference Guide.

4. Even though the return code, V0$ is X'FF, V7$ indicates SMB errors, file server error X'09 and an invalid key value X'17. The user should check V7$ evev if return code in V0$ is X'FF as per 2200/VS Local Communication Option Programmer's Reference Guide (Table A-1, Page A-2). The samples programs, TESTCON1, TESTIDX1 and TESTREL1 are also coded in the same way.

I suggest that return code, V0$ should be X'A5 in this case.

5. The 2258 interface subroutine '199 and the file designator #3 used by the subroutine '199 are not mentioned in the 2200/VS Local Communication Option Programmer's Reference Guide; but the calling routine is expected to "SELECT #3/(Platter Address)"!

To: Mr. Michael Riley (M/S 014-690)

CC: Mr. Bill Hsien (M/S 014-A3A)
Mr. Ray Turcotte (M/S 014-A3A)

From: S. Ramakrishnan

Date: 22 Oct., 1990

Sub: Status of 2258 L.C.O maintenance

---

1. Accomplishment during last week: I investigated / fixed some of the following problems:

a. I implemented CONSECUTIVE LOCK using ROCStart for 2200SRV Rel. 01.60.00 and above. GENERAL OPEN, CREATE, CONSECUTIVE LOCK, CONSECUTIVE UNLOCK, and TESTCON1 have been modified. If the SHARED mode is specified for consecutive file in GENERAL OPEN or CREATE, the file will be opened in SHARED I/O mode.

b. GENERAL OPEN fails to return alternate key parameters along with general file attributes. This problem in 2200SRV has been fixed by Mr. Harold Lim for release 01.60.10.

c. Problem No. P200006910: The function, LEN(STR(V9$())) returns the length of entire array, V9$(), as per the DIM statement. Since the array length of V9$() (2048 or 4096) is much larger than the record length, the WRITE fails. It looks like the record length has to be explicitly passed for WRITE subroutines.(?)

I have made progress in documentation.

2. Plan for the current week: I plan investigate the Problem No. P200006910 further to find a solution, if possible. I hope to complete the documentation.

3. Software test environment:

VS/OS Version:	07.30.02
VS/2200 Server Version:	01.00.14
BASIC - 2 OS Version:	03.03.06
2200/VS Services Version:	1.A

Status of 2258 LCO maintenance

22 Oct., 1990

S.No.	Bug No.	Status	Estimated date of completion	Remarks
1.	P200006911	Duplicated	Documentation error; may be VS/2200 Server error?	Please refer to Documentation Note 1.
2.	P40F403145	Closed	–	Please refer to Documentation Note 2.
3.	P50F502664	Closed	–	Can not be duplicated! Returns correct error code for invalid combinations of Volume/Library/File. Please refer to Documentation Note 3.
4.	P50F502732	Closed	Operator error	Works as documented (or designed?); please refer to Documentation Note 4.
5.	P10F226684	Closed	Operator error	Please refer to Documentation Note 7.
6.	P10F227696	Closed	–	32 VDISKs can be opened; but 32nd VDISK can not be closed.
7.	P10F227710	Closed	–	This problem has been fixed. Please refer to the cover page.
8.	P200006910	Duplicated	26 Oct., 1990	Please refer to the cover page

S.No.	Bug No.	Status	Estimated date of completion	Remarks
9.	P30F301769	Closed	-	This problem has been fixed.
10.	P50F501407	Closed	-	Can not be duplicated
11.	P50F501474	Duplicated	Documentation error	File designator #3 is used by subroutine '199. Please refer to Documentation Note 5.
12.	P50F501716	Closed	-	Can not be duplicated

Documentation Note:

1. The parameter, "V6 = Time out for hold (in seconds)", listed in the header of "VSACESS0", does not appear in the 2200/VS Local Communication Option Programmer's Reference Guide (Table 3-3, Page 3-7).

The header for file attributes, V9$() returned by General Open ('101) and Get File Attributes ('203) subroutines are different:

General Open - Header:
- 2 bytes of data count
- 62 bytes of attribute data
  - 1 byte Block header (X'01)
  - 2 bytes of count
  - Attribute data

Get File Attributes - Header
- 1 byte of word count (X'00)
- 2 bytes of byte count
- 62 bytes of attribute data
  - 1 byte Block header (X'01)
  - Attribute data

The code for file organization returned by both the subroutines for alternate indexed file is "A"(X'41); this is a valid code for alternate indexed file (refer to "RO Pack Reference Manual") not mentioned in the 2200/VS Local Communication Option Programmer's Reference Guide.

The subroutines do not seem to return correct attribute data fields for alternate keys. (May be VS/2200 Server error?)

2. This problem could not be reproduced as reported earlier. I was able to create successfully consecutive, indexed and relative files with number of records exceeding 20,000.

3. The return code, "V0$ = A5 (Error in SMB block)", is not listed in the Appendix A (Table A-1, Page A-2) of the 2200/VS Local Communication Option Programmer's Reference Guide .

Since the error codes returned by 2258 L.C.O subsystem are in hexadecimal, I suggest that the error codes be listed in hexadecimal in the 2200/VS Local Communication Option Programmer's Reference Guide.

4. Even though the return code, V0$ is X'FF, V7$ indicates SMB errors, file server error X'09 and an invalid key value X'17. The user should check V7$ evev if return code in V0$ is X'FF as per 2200/VS Local Communication Option Programmer's Reference Guide (Table A-1, Page A-2). The samples programs, TESTCON1, TESTIDX1 and TESTREL1 are also coded in the same way.

I suggest that return code, V0$ should be X'A5 in this case.

5. The 2258 interface subroutine '199 and the file designator #3 used by the subroutine '199 are not mentioned in the 2200/VS Local Communication Option Programmer's Reference Guide; but the calling routine is expected to "SELECT #3/(Platter Address)"!

6. Consecutive lock for 2200SRV release 01.60.00: This new release of 2200 server uses ROPack call "ROCStart" to implement Consecutive lock and Consecutive Unlock. The consecutive file should be opened in "shared I/O" mode before calling Consecutive Lock. The Consecutive Lock call requires only two parameters, file handle and EFS; the current implementation uses three parameters, file handle, EFS and mode.

The new release of 2200 server supports Read only, Exclusive, Extended, Wshared and Shared I/O modes whereas 2200/VS LCO supports Read only, Exclusive, Extended and Shared modes.

7. File Lock (Hold): The file lock, Indexed as well as Consecutive, as implemented for 2200/VS LCO is of limited use to 2200 users accessing VS/DMS files. The VS/DMS functions are available to 2200 users through 2200 Server running as fore ground task on one of the VS workstation emulation windows. Since all the users on 2200 send VS/DMS requests to this server, which in turn passes the requests to DMS task, VS fails to recognise that the DMS requests are from different users. So, it is possible to open a file in shared mode and lock the file through one of the 2200 workstations; the same file can be accessed through second 2200 workstation and all the records can be deleted!

Once a file is locked by a 2200 user through 2200 workstation, the file will not be avilable to other users logged on directly to VS. But the file can be shared for "dirty" read by other users on VS as well as 2200.

212

To: Mr. Michael Riley (M/S 014-690)

CC: Mr. Bill Hsien (M/S 014-A3A)
Mr. Ray Turcotte (M/S 014-A3A)

From: S. Ramakrishnan

Date: 29 Oct., 1990

Sub: Status of 2258 L.C.O maintenance

---

1. Accomplishment during last week: The following tasks were accomplished:

a. Problem No. P200006910: The length of the record is one of the file attributes stored in VS/DMS User File Block (UFB); The UFB is not accessible to the users of 2200/VS LCO. The user should pass the length of the record to the (CONSECUTIVE/INDEXED) WRITE subroutine either explicitly or implicitly for files with variable length records.

The user can implicitly pass the length of the record to the (CONSECUTIVE/INDEXED) WRITE subroutine by ending the record with a non-space dummy character, in the case of records with trailing spaces.

b. I incorporated tests for different modes (Readonly, Exclusive, Extended and Shared) of opening a file in TESTCON1, TESTIDX1 and TESTREL1.

c. I have completed documentation.

The updated version of 2200/VS LCO BASIC-2 software is residing on the disk platter, 310, of the test system located in the lab on the 6th floor, Tower 2.

The related WP documents are in the library, X on VS system, W0000035; the document Ids. are: 0893X, 0894X, 0895X, 0897X, 0898X, 0899X and 0900X.

2. Software test environment:

VS/OS Version:	07.30.02
VS/2200 Server Version:	01.60.00
BASIC - 2 OS Version:	03.03.06
2200/VS Services Version:	1.A

Status of 2258 LCO maintenance

29 Oct., 1990

S.No.	Bug No.	Status	Estimated date of completion	Remarks
1.	P200006911	Closed OK	Documentation error	Please refer to Documentation Note 1.
2.	P40F403145	Closed OK	-	Can not be duplicated Can create relative, consecutive and indexed files with number of records exceeding 20,000.
3.	P50F502664	Closed OK	-	Can not be duplicated Returns correct error code for invalid combinations of Volume/Library/File. Please refer to Documentation Note 2.
4.	P50F502732	Closed OK	Operator error	Works as documented. Please refer to Documentation Note 3.
5.	P10F226684	Closed OK	Operator error	Please refer to Documentation Note 6.
6.	P10F227696	Closed	-	32 VDISKs can be opened; but 32nd VDISK can not be closed.
		Can not close 32 VDISK Summer will fix.		
7.	P10F227710	Closed OK	-	This problem has been fixed.
8.	P200006910	Closed OK	-	Please refer to the cover page

S.No.	Bug No.	Status	Estimated date of completion	Remarks
9.	P30F301769	Closed ok	-	This problem has been fixed.
10.	P50F501407	Closed ok	-	Can not be duplicated
11.	P50F501474	Closed ok	Documentation error	File designator #3 is used by subroutine '199. Please refer to Documentation Note 4.
12.	P50F501716	Closed ok	-	Can not be duplicated

Documentation Note:

1. The parameter, "V6 = Time out for hold (in seconds)", listed in the header of "VSACESS0", does not appear in the 2200/VS Local Communication Option Programmer's Reference Guide (Table 3-3, Page 3-7).

The header for file attributes, V9$() returned by General Open ('101) and Get File Attributes ('203) subroutines are different:

General Open - Header:
- 2 bytes of data count
- 142 bytes of attribute data
  - 1 byte Block header (X'01)
  - 2 bytes of data count in this block
  - Attribute data

Get File Attributes - Header
- 1 byte of word count (X'00)
- 2 bytes of byte count
- 142 bytes of attribute data
  - 1 byte Block header (X'01)
  - 2 bytes of data count in this block
  - Attribute data

The code for file organization returned by both the subroutines for alternate indexed file is "A"(X'41); this is a valid code for alternate indexed file (refer to "ROPack Reference Manual") not mentioned in the 2200/VS Local Communication Option Programmer's Reference Guide.

The General Open ('101) subroutine does not return correct attribute data fields for alternate keys. This problem has been fixed by Mr. Harold Lim in 2200SRV release 01.60.10

The Get File Attributes ('203) subroutine is designed to return only the general file attribute data, but not the alternate key file attribute data.

2. The return code, "V0$ = A5 (Error in SMB block)", is not listed in the Appendix A (Table A-1, Page A-2) of the 2200/VS Local Communication Option Programmer's Reference Guide .

Since the error codes returned by 2258 L.C.O subsystem are in hexadecimal, I suggest that the error codes be listed in hexadecimal in the 2200/VS Local Communication Option Programmer's Reference Guide.

3. Even though the return code, V0$ is X'FF, V7$ indicates SMB errors, file server error X'09 and an invalid key value X'17. The user should check V7$ even if return code in V0$ is X'FF as per 2200/VS Local Communication Option Programmer's Reference Guide (Table A-1, Page A-2). The samples programs, TESTCON1, TESTIDX1 and TESTREL1 are also coded in the same way.

4. The 2258 interface subroutine '199 and the file designator #3 used by the subroutine '199 are not mentioned in the 2200/VS Local Communication Option Programmer's Reference Guide; but the calling routine is expected to "SELECT #3/(Platter Address)"!

5. Consecutive lock for 2200SRV release 01.60.00: This new release of 2200 server uses ROPack call "ROCStart" to implement Consecutive lock and Consecutive Unlock. The consecutive file should be opened in "shared I/O" mode before calling Consecutive Lock. The Consecutive Lock call requires only two parameters, file handle and EFS; the current implementation uses three parameters, file handle, EFS and mode.

The new release of 2200 server supports Read only, Exclusive, Extended, Wshared and Shared I/O modes whereas 2200/VS LCO supports Read only, Exclusive, Extended and Shared modes.

6. File Lock (Hold): The file lock, Indexed as well as Consecutive, as implemented for 2200/VS LCO is of limited use to 2200 users accessing VS/DMS files. The VS/DMS functions are available to 2200 users through 2200 Server running as fore ground task on one of the VS workstation emulation windows. Since all the users on 2200 send VS/DMS requests to this server, which in turn passes the requests to DMS task, VS fails to recognise that the DMS requests are from different users. So, it is possible to open a file in shared mode and lock the file through one of the 2200 workstations; the same file can be accessed through second 2200 workstation and all the records can be deleted!

Once a file is locked by a 2200 user through 2200 workstation, the file will not be available to other users logged on directly to VS. But the file can be shared for "dirty" read by other users on VS as well as 2200.

To: Mr. Michael Riley (M/S 014-690)

From: S. Ramakrishnan

Date: 1 Oct., 1990

Sub: Status of 2258 L.C.O maintenance

---

1. Accomplishment during last week: I have changed VEDIT (Edit VDISK configuration) to fix the following bugs:

(a) VEDIT fails to compare the (file) names of VDISKs completely and gives an incorrect error message, "Duplicate VDISK".
e.g: VDISK names, VDISK1 and VDISK10 are declared as duplicates
After the fix, the entire (file) names of VDISKs are compared and only the genuine duplicates are declared as "Duplicate VDISK".

(b) VEDIT has been enhanced to accept "shared" mode.

2. New bugs encountered:

(a) Even though the system comes up with 32 VDISKs either through "Attach DMS/VDISKs" or "Change VDISK configuration", the system fails to close only the last (32nd) VDISK either through "Detach DMS/VDISKs" or "Change VDISK configuration"; the 32nd VDISK is still accessable, even though "View VDISKs" does not list this 32nd VDISK! (32nd VDISK can be "closed" by terminating VS/2200 Server, "2200SRV".)

(b) The system does not open VDISKs in shared mode either through "Attach DMS/VDISKs" or "Change VDISK configuration"; displays error message, "file attributes not supported".

3. Plan for the current week: I plan to investigate and fix the above mentioned bugs; try to fix PTRs, P10F227710 and P40F403145.

4. VS resource: VS system was not accessable on Tuesday and better part of Wednessday (25th and 26th). The VS system is now being IPLed often without warning. I spoke to couple of persons IPLing the system about the MVP 2200 system in operation connected the VS system; there is no change in the status since the VS system is handled by different persons at different times.

5. Software test environment:

VS/OS Version:	07.30.02
VS/2200 Server Version:	01.00.14
BASIC - 2 OS Version:	03.03.06
2200/VS Services Version:	1.A

Status of 2258 LCO maintenance

1 Oct., 1990

S.No.	Bug No.	Status	Estimated date of completion	Remarks
1.	P200006911	Duplicated	Documentation error; may be VS/2200 Server error?	Please refer to Documentation Note 1.
2.	P40F403145	Duplicated	5 Oct., 1990	Please refer to Documentation Note 2.
3.	P50F502664	Closed	-	Can not be duplicated! Returns correct error code for invalid combinations of Volume/Library/File. Please refer to Documentation Note 3.
4.	P50F502732	Closed	Operator error	Works as documented (or designed?); please refer to Documentation Note 4.
5.	P10F226684	Open		
6.	P10F227696	closed	-	Please refer to the bugs reported on cover page.
7.	P10F227710	Duplicated	5 Oct., 1990	Can write in some protected numeric fields and beyond!
8.	P200006910	Open		

S.No.	Bug No.	Status	Estimated date of completion	Remarks
9.	P30F301769	Duplicated		Subroutines '109 and ''110 return key mask in V4$ as "534D"
10.	P50F501407	Closed	-	Can not be duplicated
11.	P50F501474	Duplicated	Documentation error	File designator #3 is used by subroutine ''199. Please refer to Documentation Note 5.
12.	P50F501716	Closed	-	Can not be duplicated

Documentation Note:

1. The parameter, "V6 = Time out for hold (in seconds)", listed in the header of "VSACESS0", does not appear in the 2200/VS Local Communication Option Programmer's Reference Guide (Table 3-3, Page 3-7).

The header for file attributes, V9$() returned by General Open ('101) and Get File Attributes ('203) subroutines are different:

General Open - Header:
- 2 bytes of data count
- 62 bytes of attribute data
  - 1 byte Block header (X'01)
  - 2 bytes of count
  - Attribute data

Get File Attributes - Header
- 1 byte of word count (X'00)
- 2 bytes of byte count
- 62 bytes of attribute data
  - 1 byte Block header (X'01)
  - Attribute data

The code for file organization returned by both the subroutines for indexed file is "A"(X'41); this is a valid code (refer to "RO Pack Reference Manual") not mentioned in the 2200/VS Local Communication Option Programmer's Reference Guide.

The subroutines do not seem to return correct attribute data fields for alternate keys. (May be VS/2200 Server error?)

2. The Create file subroutine ('200) returns error code (X'A5) in V0$, if the file size exceeds 10,000 records; V7$ returns Catalog server error (X'08) and disk space or disk space extend error (X'0D). The error occurs for indexed, consecutive and relative file organizations tried.

The VS/2200 Server does not crash after the error; VS workstation emulation, DMS access and VDISK access are working fine.

3. The return code, "V0$ = A5 (Error in SMB block)", is not listed in the Appendix A (Table A-1, Page A-2) of the 2200/VS Local Communication Option Programmer's Reference Guide .

Since the error codes returned by 2258 L.C.O subsystem are in hexadecimal, I suggest that the error codes be listed in hexadecimal in the 2200/VS Local Communication Option Programmer's Reference Guide.

4. Even though the return code, V0$ is X'FF, V7$ indicates SMB errors, file server error X'09 and an invalid key value X'17. The user should check V7$ evev if return code in V0$ is X'FF as per 2200/VS Local Communication Option Programmer's Reference Guide (Table A-1, Page A-2). The samples programs, TESTCON1, TESTIDX1 and TESTREL1 are also coded in the same way.

I suggest that return code, V0$ should be X'A5 in this case.

5. The 2258 interface subroutine '199 and the file designator #3 used by the subroutine '199 are not mentioned in the 2200/VS Local Communication Option Programmer's Reference Guide; but the calling routine is expected to "SELECT #3/(Platter Address)"!

To: Mr. Michael Riley (M/S 014-690)

From: S. Ramakrishnan

Date: 24 Sept., 1990

Sub: Status of 2258 L.C.O maintenance

---

1. Accomplishment during last week: I have investigated a few more of the bugs reported. Please refer to the attached sheets for further information.

2. Plan for the current week: I plan to continue with the investigation of remaining bugs; fix "VEDIT" for creating configuration file with 32 VDISKs and, enhance for "Shared" mode; and fix some more bugs.

3. Requirement: I request a print be attached to MVP 2200.

4. Software test environment:

VS/OS Version:	07.30.02
VS/2200 Server Version:	01.00.14
BASIC - 2 OS Version:	03.03.06
2200/VS Services Version:	1.A

Status of 2258 LCO maintenance

24 Sept., 1990

S.No.	Bug No.	Status	Estimated date of completion	Remarks
1.	P200006911	Duplicated	Documentation error; may be VS/2200 Server error?	Please refer to Documentation Note 1.
2.	P40F403145	Duplicated		Please refer to Documentation Note 2.
3.	P50F502664	Closed	-	Can not be duplicated! Returns correct error code for invalid combinations of Volume/Library/File. Please refer to Documentation Note 3.
4.	P50F502732	Closed	Operator error	Works as documented (or designed?); please refer to Documentation Note 4.
5.	P10F226684	Open		
6.	P10F227696	Open	Investigating	Unable to create VDISK config. file with 32 VDISKs. Debugging "VEDIT"!
7.	P10F227710	Duplicated		Can write in some protected numeric fields and beyond!
8.	P200006910	Open		

S.No.	Bug No.	Status	Estimated date of completion	Remarks
9.	P30F301769	Duplicated	Investigating	Subroutines '109 and '110 return key mask in V4$ as "534D"
10.	P50F501407	Closed	-	Can not be duplicated
11.	P50F501474	Duplicated	Documentation error	File designator #3 is used by subroutine '199. Please refer to Documentation Note 5.
12.	P50F501716	Closed	-	Can not be duplicated

Documentation Note:

1. The parameter, "V6 = Time out for hold (in seconds)", listed in the header of "VSACESS0", does not appear in the 2200/VS Local Communication Option Programmer's Reference Guide (Table 3-3, Page 3-7).

The header for file attributes, V9$() returned by General Open ('101) and Get File Attributes ('203) subroutines are different:

General Open - Header:
- 2 bytes of data count
- 62 bytes of attribute data
  - 1 byte Block header (X'01)
  - 2 bytes of count
  - Attribute data

Get File Attributes - Header
- 1 byte of word count (X'00)
- 2 bytes of byte count
- 62 bytes of attribute data
  - 1 byte Block header (X'01)
  - Attribute data

The code for file organization returned by both the subroutines for indexed file is "A"(X'41); but the code returned should be "I"(X'49). (May be VS/2200 Server error?)

The subroutines do not seem to return correct attribute data fields for alternate keys. (May be VS/2200 Server error?)

2. The Create file subroutine ('200) returns error code (X'A5) in V0$, if the file size exceeds 10,000 records; V7$ returns Catalog server error (X'08) and disk space or disk space extend error (X'0D). The error occurs for indexed, consecutive and relative file organizations tried.

The VS/2200 Server does not crash after the error; VS workstation emulation, DMS access and VDISK access are working fine.

3. The return code, "V0$ = A5 (Error in SMB block)", is not listed in the Appendix A (Table A-1, Page A-2) of the 2200/VS Local Communication Option Programmer's Reference Guide .

Since the error codes returned by 2258 L.C.O subsystem are in hexadecimal, I suggest that the error codes be listed in hexadecimal in the 2200/VS Local Communication Option Programmer's Reference Guide.

4. Even though the return code, V0$ is X'FF, V7$ indicates SMB errors, file server error X'09 and an invalid key value X'17. The user should check V7$ evev if return code in V0$ is X'FF as per 2200/VS Local Communication Option Programmer's Reference Guide (Table A-1, Page A-2). The samples programs, TESTCON1, TESTIDX1 and TESTREL1 are also coded in the same way.

I suggest that return code, V0$ should be X'A5 in this case.

5. The 2258 interface subroutine '199 and the file designator #3 used by the subroutine '199 are not mentioned in the 2200/VS Local Communication Option Programmer's Reference Guide; but the calling routine is expected to "SELECT #3/(Platter Address)"!

6. The error codes displayed by VS/2200 Server are not listed in the 2200/VS Local Communication Option Programmer's Reference Guide.

To: Mr. Bill Hsien (M/S 014-A3A)
Ms. Deborah Snapper (M/s 014-A3A)
Mr. Pradeep Barthakur (M/S 019-690)

CC: Mr. Michael Riley (M/S 014-690)
Ms. Ruth Ann Blaise (M/S 014-A3A)
Mr. Ray Turcotte (M/S 014-A3A)

From: S. Ramakrishnan

Date: 7 Sept., 1990

Sub: Maintenance of MVP and OIS software products by Datamatics Limited, Bombay.

Ref: Meeting held on 6 Sept., 1990

Mr. Bill Hsien, Ms. Deborah Snapper, Mr. Pradeep Barthakur and myself participated in a meeting on 6 Sept., 1990 to discuss about maintenance of software products by Datamatics Limited, Bombay. The following points were discussed and, agreed upon:

1. Datamatics will maintain from Bombay, India mature MVP and OIS software products (products which are not "hot" or critical).

2. I will provide a list of MVP and OIS hardware / software available at Datamatics Limited, Bombay. Wang will ship necessary additional hardware and software to Datamatics, Bombay for the maintenance of MVP and OIS software products.

3. Mr. Michael Riley will be the Wang co-ordinator at Lowell for MVP software products.

4. Ms. Ruth Ann Blaise will be the Wang co-ordinator at Lowell for OIS software products.

5. I will be the Datamatics co-ordinator at Bombay for MVP and OIS software products.

6. The Wang co-ordinator will screen and prioritise PTRs before sending to Datamatics, Bombay.

6. Datamatics will provide an estimate of time required to investigate and fix the PTRs.

7. Datamatics will assume responsiblity for investigating and fixing the PTRs and, releasing the software product with suitable Software Release Note / documentation. A sample Release Memorandum for OIS software product has been enclosed for reference.

8. Datamatics will send a weekly status report on the maintenance of MVP and OIS software products to Wang co-ordinators with a copy marked to Mr. Ray Turcotte.

9. Wang will raise open purchase orders for the maintenance of MVP (RDB #8332) and OIS (RDB #8335) software products.

10. Datamatics will raise invoices against these purchase orders after the completion of investigation / fixing of PTRs reported.

MVP Hardware available at Datamatics Limited, Bombay, India

7 Sept., 1990

S. No.	Equipment	Model	Qty	Remarks
1.	MVP 2200 CPU	MVP 2200	3	One CPU defective
2.	Phoenix disk drive	2280-C-3	1	96 M bytes
3.	Dual diskette drive	2270A-2	1	8" SSSD hard sector
4.	5-1/4" diskette and Winchester drives	2275	1	Shipment under customs clearance
5.	Epson printer	FX-80	1	
6.	Workstations	2236-D	3	One workstation defective

MVP Software available at Datamatics Limited, Bombay, India

7 Sept., 1990

S. No.	Software	Release	Remarks
1.	BASIC-2 OS	3.00	BASIC-2 OS Rel. 3.4 source code available for maintenance
2.	IBM 3275 Emulation		Maintained by Datamatics
3.	IBM 3274 (SNA) Cluster Controller Emulation		Maintained by Datamatics

OFFICE CORRESPONDENCE

TO : MR. MICHAEL RILEY (MS 014-690)
WANG LABORATORIES INC., LOWELL FAX :-508-452-[illegible]

FROM : S. RAMAKRISHNAN, DATAMATICS LIMITED, BOMBAY

CC : MR. PRADEEP BARTHAKUR (MS 019-640)
MS. TERRI INCA (MS 014-A3A)
WANG LABS, LOWELL, USA

DATE : AUGUST 28, 1990

SUB : MAINTENANCE OF BASIC - 2 OS ON MVP

REF : OUR FAX DATED AUGUST 27, 1990

1. Please refer to our fax dated August 22, 1990. We need immediately the following information on your letterhead for Indian customs to clear the shipment of 2275 controller / disk drive

   1. Description of equipment with technical specifications
   2. Name of the manufacturer with country
   3. Serial number of the machine
   4. Year of manufacturer (1985)
   5. The price at which the equipment was purchased
   6. Current value of the equipment for customs purpose only

2. We have the second MVP CPU operational with the following cards :

Type of board	Qnty
7587	1
7796	1
7588	1
6789	1
7797	1
6791	1
6792	1
6793	1

...e mentioned controllers on
the debug MVP system for the maintenance of BASIC - 2 OS.

3. We like to have the following documentation on printer drivers written by Mr. David M. Barrett of Wang Labs, USA :

1. 2200 generalised printer driver functional specs
2. 2200 generalised printer driver standard character set, control sequences and escape sequences
3. 2200 generalised printer driver design specifications

Warm regards,

RAMAKRISHNAN)

001

08/31/90 09:24

Datamatics Limited

Unit No. 38/39, SDF II, SEEPZ, Andheri (E), Bombay-400 096. India
Tel. : +91 (22) 6320611, 6324235-6-7, Telex : 011-79064 'DCSP IN' ● Fax : +91 (22) 6366368

FACSIMILE CORRESPONDENCE

TO : MR. MICHAEL RILEY (MS 014-690)
WANG LABORATORIES INC., LOWELL FAX : ~~508-452-0690~~

FROM : S. RAMAKRISHNAN, DATAMATICS LIMITED, BOMBAY

CC : MR. PRADEEP BARTHAKUR (MS 019-690)
MS. TERRI INCA (MS 014-A3A)
WANG LABS, LOWELL, USA

DATE : AUGUST 28, 1990

SUB : MAINTENANCE OF BASIC - 2 OS ON MVP

REF : OUR FAX DATED AUGUST 27, 1990

1. Please refer to our fax dated August 22, 1990. We need immediately the following information on your letterhead for Indian customs to clear the shipment of 2275 controller / disk drive.

   1. Description of equipment with technical specification
   2. Name of the manufacturer with country
   3. Serial number of the machine
   4. Year of manufacturer (1985)
   5. The price at which the equipment was purchased
   6. Current value of the equipment for customs purpose only

2. We have the second MVP CPU operational with the following cards

Type of board	Qnty
7587	1
7796	1
7588	1
6789	1
7797	1
6791	1
6792	1
6793	1

Regd. Eucharistic Congress Bldg., No. III, 6, Convent St., Bombay-400 039. Tel. : 202 05 31 / 202 04 78

Please note that we do not have controller cards for terminals, floppy disk drive, phoenix / hard disk drive or printer for this CPU. You may also note that we have only one 32 K memory board for this MVP CPU.

Please advise whether we need the above mentioned controllers on the debug MVP system for the maintenance of BASIC - 2 OS.

3. We like to have the following documentation on printer drivers written by Mr. David M. Barrett of Wang Labs, USA :

1. 2200 generalised printer driver functional specs
2. 2200 generalised printer driver standard character sets, control sequences and escape sequences
3. 2200 generalised printer driver design specification

Warm regards,

(S RAMAKRISHNAN)

Datamatics Limited

Unit No. 38/39, SDF II, SEEPZ, Andheri (E), Bombay-400 096. India.
Tel. : +91 (22) 6320611, 6324235-6-7, Telex : 011-78064 'DCSP IN' ● Fax : +91 (22) 6366368

FACSIMILE CORRESPONDENCE

TO : MR. MICHAEL RILEY (MS 014-690) 70524 FAX : 001-508-452-0896
WANG LABS, LOWELL, USA

FROM : S. RAMAKRISHNAN, DATAMATICS LIMITED, BOMBAY

CC : MR. JIM NIHAN (MS 012-690) 75097
MR. PRADEEP BARTHAKUR (MS 019-690)
MS. TERRI INCA (MS 014-A3A)
WANG LABS, LOWELL, USA

DATE : JULY 3, 1990

1. THERE WAS A HEADCRASH ON OUR PHOENIX DISK DRIVE CONNECTED TO MVP 2200. OUR ENGINEERS ARE REPAIRING THE DISK DRIVE. WE HOPE THAT THE MVP SYSTEM WILL BE UP WITHIN A FEW DAYS.

2. WE HAVE A 8" HARD SECTORED DISKETTE DRIVE ATTACHED TO OUR MVP BUT NOT A 5-1/4" DSDD DISKETTE DRIVE. SO, PLEASE SEND US THE FILE FOR REPRODUCING AND TESTING THE LIMITS BUG ON 8" SSSD HARD SECTORED DISKETTE. WE REQUEST YOU TO SEND FILES ONLY ON 8" SSSD HARD SECTORED DISKETTE IN FUTURE IN ORDER TO AVOID DELAYS.

3. I WILL SEND YOU WEEKLY STATUS REPORT EVERY MONDAY STARTING FROM JULY 16, 1990.

4. WE WILL START THE STUDY AND BUG FIXING ACTIVITY ON MVP BASIC-2 OS RELEASE 3.4 SOON AFTER OUR MVP SYSTEM BECOMES OPERATIONAL.

REGARDS,

(S. RAMAKRISHNAN)

011-91-22-636-6368
VS 72190

Item Subject: Cover Memo

here it is

LEVEL III (2 months)

Living Allowance	$700 x 2	= 1,400
T. F	$1,700 x 2	= 3,400
		4,800
		5,000
A. F	$2000	6,300

TO: Bill Hsien

FROM: Michael Riley

DATE: July 10, 1990

SUBJ: 2258 PTRs Manpower Justification

There are 11 open 2258 type of PTRs in RDB 8332 (2200 R&D) that are waiting to be fixed. There are 2 P1s, 5 P2s and 4 P3s. The P1 customers have had a software patch given them but the changes have not been rolled into a formal release.

The 5558 PTR problems are as follows:
P200006911, P2, P40F403145, P2, P50F502664, P3, P50F502732, P3, P10F226684, P1
P10F227696, P2, P10F227710, P2, P200006910, P2, P30F301769, P1, P50F501407, P3
P50F501474, P3

Most of these problems are BASIC-2 type of problems. The P3 are documentation problems. I am requesting a person from Datamatics to work at Wang (Lowell, Ma.) to fix these bugs. I estimate that the job should not take more than two man months. I will provide the 2200 and the VS systems needed to fix and test the 2258 bugs. The project will be classified as complete when all the 2258 PTRs have been closed and Rev. 2 of the 2258 software has been released. I will be responsible for ensuring that the software meets the 2258s specification before release.

0166m

WANG LABORATORIES, INC. ONE INDUSTRIAL AVENUE, LOWELL, MA 01851 • TEL: 508/459-5000 TELEX: 172108

WANG

To: S. Ramakrishnan (Bombay)
CC. Dr. Lalit S. Kanodia
FROM: Michael Riley
DATE: 07/16/90
PAGE: 1

I started This project The first of May and now it is the middle of July and I am not any closer To a solution than when I started. I am NOT happy with the progress So far!!!

Please FAX ALL status to me on This project. The number is 1-508-458-0620

Michael

Datamatics Limited

Unit No. 38/39, SDF II, SEEPZ, Andheri (E), Bombay-400 096. India.
Tel. : +91 (22) 6320611, 6324235-6-7, Telex : 011-79064 'DCSP IN' ⊕ Fax : +91 (22) 6366368

FACSIMILE CORRESPONDENCE

TO : MR. MICHAEL RILEY (MS 014-690) FAX : 508-452-0896
WANG LABS, LOWELL 70524

FROM : S. RAMAKRISHNAN DATAMATICS LIMITED, BOMBAY

CC : MR. PRADEEP BARTHAKUR (MS 019-690)
MS. FERRI INCA (MS 014-63A)
WANG LABS, LOWELL

DATE : JULY 16, 1990

1. WE WILL SHORTLY FAX YOU THE SCHEDULE FOR FIXING PRINTER AND LIMITS BUGS SOON AFTER WE ARE ABLE TO REPRODUCE THE BUGS.

2. WE WOULD LIKE TO REMIND YOU TO SHIP THE FILE REQUIRED FOR REPRODUCING AND TESTING THE LIMITS BUG ON 8" SI HARD SECTORED DISKETTE. PLEASE SEND FILES ONLY ON 8" SSSD HARD SECTORED DISKETTE IN FUTURE IN ORDER TO AVOID DELAYS.

REGARDS,

RAMAKRISHNAN

07 30 90

Datamatics Limited

Unit No. 38/39, SDF II, SEEPZ, Andheri (E), Bombay-400 096. India.
Tel. : +91 (22) 6320511, 6324235-6-7, Telex : 011-79084 'DCSP IN' ● Fax : +91 (22) 6368368

30th July, 1990. FAX NO. 508-458-0620

To : Mr. Michael Riley (MS014-690) - Wang Labs Inc, Lowell USA

cc : Mr. Pradeep Barthakur (MS 019-690)
Ms. Terri Inca (MS 014-A3A)
Wang Laboratories Inc., USA

Mr. Ramakrishnan - Datamatics Ltd - Bombay - In.

e maintenance of MVP BASIC-2 OS Rel 3.4

purchase order No. U4 W279291

the following set up for the maintenance of
S:

System with dual floppy drive (8" SSSD Hard
d)

b) one phoenix disk drive
c) Two workstations
d) One Epson Fx-80 printer

Our engineers are also setting up second MVP cpu.

2. We installed BASIC-2 OS Version from the disk platters shipped by you. When the system is booted with the new version of BASIC-2 OS, the initial screen comes with the following choices:

a) Multiuser Basic - 2
a) Multiuser Basic - 2 R 3.0
a user Basic - 2 R 2.7
Multiuser Basic - 2 R 3.2.6 Test Version
agnostics

DATAMATICS

We tried to reproduce the bug with choices (a), (b), (c) and (d) indicated above. The BASIC-2 OS is loaded properly with choices (a), (b) and (d), but fails to load with choice (c)

The EPSON printer works perfectly well on port 215 with printer driver on and, fails to give line feed with printer driver off. But the printer does not seem to respond with printer driver on or off, when the printer is connected to port 204.
Our engineers are looking into this specific problem

3 We are glad to learn that you are planning to ship 2275 controller with 5 1/4" diskette drive for fixing LIMITS bug.

4. Please note that all equipments shipped to India should work at 230 volts, 50 HZ electric power supply.

5. The consignment should be shipped by an freight. Please mention clearly on your invoice the following:

"The value is declared for customs purpose only. The equipment is supplied free of cost to Datamatics Limited by Wang Laboratories Inc., One Industrial Avenue, Lowell, MA 01851, USA".

Warm Regards,

(S. RAMAKRISHANAN)

Datamatics Limited

Unit No. 38/39, SDF II, SEEPZ, Andheri (E), Bombay-400 096. India.
Tel. : +91 (22) 6320511, 6324235-6-7, Telex : 011-79064 'DCSP IN' @ Fax : +91 (22) 6366368

FACSIMILE CORRESPONDENCE FAX NO. : 001-508-452-0896

TO : MS. MICHAEL RILEY (MS 014-690) 70524
WANG LABS, LOWELL, USA

CC : MR. PRADEEP BARTHAKUR (MS 019-690)
MS. TERRI INCA (MS 014-A3A)
WANG LABS, LOWELL, USA

FROM : S. RAMAKRISHNAN, DATAMATICS LIMITED, BOMBAY

DATE : AUGUST 16, 1990

SUB : YOUR SHIPMENT OF 2275 CONTROLLER / DISK DRIVE

REF : YOUR PURCHASE ORDER NO. U4 W279291 AND OUR FAX DATED JULY 30, 1990

OUR ENGINEER INSPECTED YOUR SHIPMENT OF 2275 CONTROLLER / DISK DRIVE [illegible] CUSTOMS WAREHOUSE. THE EQUIPMENT IS MARKED FOR USE AT 115 V. [illegible] ELECTRIC SUPPLY. THE CONTROLLER CARD FOR THE DRIVE AND THE [illegible] SIGNAL AND POWER CABLES ARE NOT FOUND IN THE CONSIGNMENT.

PLEASE REFER TO OUR FAX DATED JULY 30, 1990, IN WHICH WE HAVE STATED THAT ALL EQUIPMENTS SHIPPED TO INDIA SHOULD WORK AT 230 V., 50 HZ. ELECTRIC SUPPLY.

PLEASE CONFIRM BY RETURN FAX WHETHER THE EQUIPMENT HAS BEEN MODIFIED TO WORK AT 230 V., 50 HZ. OTHERWISE WE WILL SEND THE EAUIPMENT BACK TO YOU FOR THE NECESSARY MODIFICATIONS.

WARM REGARDS,

S. RAMAKRISHNAN

Datamatics Limited

Unit No. 38/39, SDF II, SEEPZ, Andheri (E), Bombay-400 096. India.
Tel. : +91 (22) 6320511, 6324235-6-7, Telex : 011-78064 'DCSP IN' ● Fax : +91 (22) 6366368

FACSIMILE CORRESPONDENCE FAX NO. : 001-508-452-0896

TO : MS. MICHAEL RILEY (MS 014-690) 70524
WANG LABS, LOWELL, USA

CC : MR. PRADEEP BARTHAKUR (MS 019-690)
MS. TERRI INCA (MS 014-A3A)
WANG LABS, LOWELL, USA

FROM : S. RAMAKRISHNAN, DATAMATICS LIMITED, BOMBAY

DATE : AUGUST 14, 1990

SUB : SOFTWARE MAINTENANCE OF MVP BASIC - 2 OS REL 3.4

REF : YOUR PURCHASE ORDER NO. U4 W279291 AND OUR FAX DATED AUGUST 8, 1990

1. YOUR SHIPMENT OF 2275 CONTROLLER / DISK DRIVE HAS LANDED IN BOMBAY AND, AWAITING CUSTOMS CLEARANCE. WE HOPE TO HAVE THE SHIPMENT CLEARED BY THE CUSTOMS BY THE END OF THIS WEEK.

   WE PLAN TO REPRODUCE THE LIMITS BUG REPORTED AGAINST BASIC - 2 OS SOON AFTER THE INSTALLATION OF 2275 CONTROLLER / DISK DRIVE.

2. OUR SECOND MVP CPU IS STILL NOT OPERATIONAL; OUR ENGINEERS ARE WORKING ON THE SYSTEM.

   WE ARE AWAITING YOUR SHIPMENT OF MDU BOARDS WITH CABLES FOR DEBUGGING AND FIXING PRINTER BUG REPORTED AGAINST BASIC - 2 OS.

WARM REGARDS,

S. RAMAKRISHNAN

Datamatics Limited

Unit No. 38/39, SDF II, SEEPZ, Andheri (E), Bombay-400 096. India.
Tel. : +91 (22) 6320511, 6324235-6-7, Telex : 011-79064 'DCSP IN' ● Fax : +91 (22) 6366368

FACSIMILE CORRESPONDENCE

TO : MR. MICHAEL RILEY (MS 014-690) 70524 FAX : 508-452-0896
WANG LABS, LOWELL, USA

FROM : S. RAMAKRISHNAN, DATAMATICS LIMITED, BOMBAY

CC : MR. PRADEEP BARTHAKUR (MS 019-690)
MS. TERRI INCA (MS 014-A3A)
WANG LABS, LOWELL, USA

DATE : AUGUST 1, 1990

SUB : SOFTWARE MAINTENANCE OF MVP BASIC-2 OS REL 3.4

REF : YOUR PURCHASE ORDER NO. 04 W279291. OUR FAX DATED JULY 30, 1990

1. WE ARE ABLE TO REPRODUCE THE PRINTER DRIVER BUG WITH THE PRINTER CONNECTED TO PORT 204 WITH BASIC-2 OS RELEASE 3.0 AND 3.3. HOWEVER, WE ARE NOT ABLE TO LOCATE BASIC-2 OS RELEASE 3.4 EXECUTABLE OBJECT VERSION.

   WE SET UP OUR SYSTEM WITH THREE PARTITIONS. PARTITION 1 AND 3 ARE ATTACHED TO TERMINAL NO. 1 AND PARTITION 2, ATTACHED TO TERMINAL NO. 2. PRINTER DRIVER TABLE WAS SET @PM010V2 FOR EPSON PRINTER.

   THE FOLLOWING PROGRAN "TEST" WAS RUN IN FOREGROUND AS WELL AS IN BACKGROUND :

```
10  SELECT PRINT 204
20  PRINT "ABCDEFGHIJKLMNOPQRSTUVWXYZABCDEFGHIJKLMNOPQRSTUVWXYZ"
30  GOTO
```

   THE PRINTER GIVES PROPER LINE FEED AFTER EVERY LINE PRINTED IN THE FOREGROUND BUT FAILS TO GIVE THE NECESSARY LINE FEED IN THE BACKGROUND EVEN THOUGH THE PRINTER DRIVER IS ON. THE SAME BUG IS ENCOUNTERED FOR PRINTER DRIVER @PM017V3.

2. WE ARE STUDYING THE SOURCE CODE OF BASIC-2 OS RELEASE 3.4 SHIPPED BY YOU. WE FIND THAT SOURCE PROGRAM IS WRITTEN IN MDU ASSEMBLER.

3. WE NEED MDU BOARDS WITH CABLES FOR DEBUGGING AND FIXING BASIC-2 SOURCE CODE. WE HAVE SHIPPED THE TWO MDU BOURDS AND CABLES TO WANG LABS, USA IN MAY-JUNE, 1988, AS REQUESTED BY WANG. I HAVE ENCLOSED THE RELEVANT AIRWAY BILL AS WELL AS DATAMATICS INVOICE FOR THE SHIPMENT. YOU MAY PLEASE CONTACT MR. TYLOR OLSON (MS 014-A7A) FOR FURTHER DETAILS.

   PLEASE ARRANGE TO SHIP THE MDU BOARDS WITH CABLES SO THAT WE WILL BE ABLE TO FIX BUGS REPORTED AGAINST BASIC-2 OS.

REGARDS,

S. RAMAKRISHNAN

Datamatics Consultants Ltd.

... 39. SD... SEEPZ, Andheri (East), Bombay-400 096. Tel. : 632 05 11, 632 42 37 Telex : 011-71400

ATTN: MR.TYLER OLSEN
WANG LABORATORIES INC,
ONE INDUSTRIAL AVENUE,
LOWELL,MA 01851,
U.S.A.

INVOICE No. P/SEEPZ/179
Date 31/5/88.
Ref :

DESCRIPTION	UNITS	UNIT PRICE	AMOUNT.
MDU BOARDS PART NO T112A WITH CABLES	2	RS.11499.34	RS.22998.68

GR WAIVER NO

CONVERSION RATE US$ 7.630
RS.100.00

FOB VALUE RS.22998.68
~~FREIGHT~~ ~~RS.~~
TOTAL RS.22998.68

Re-Export of computer parts imported vide B/E NO A521 dt 16/1/85

(VALUE FOR CUSTOMS PURPOSE ONLY)

Rupees Total Rs.

FOR DATAMATICS CONSULTANTS LTD

R.P.PANDIT.
COMMERCIAL MANAGER

M/S.DATAMATICS CONSULTANTS LTD.
39, SDF BUILDING,
SEEPZ ANDHERI EAST,
BOMBAY - 400 096
INDIA.

WANG LABORATORIES INC.
ONE, INDUSTRIAL AVENUE,
LOWELL, MA 01851
U.S.A.
ATTN. MR. TYLER OLSEN.

Air Waybill

Swissair

Copies 1, 2 and 3 of this Air Waybill are originals and have the same validity

It is agreed that the goods described herein are accepted in apparent good order and condition (except as noted) for carriage SUBJECT TO THE CONDITIONS OF CONTRACT ON THE REVERSE HEREOF. THE SHIPPER'S ATTENTION IS DRAWN TO THE NOTICE CONCERNING CARRIER'S LIMITATION OF LIABILITY. Shipper may increase such limitation of liability by declaring a higher value for carriage and paying a supplemental charge if required

Accounting Information

FREIGHT COLLECT

LEMUIR AIR EXPRESS BOMBAY

Agent's IATA Code: 14-3-0284 | Account No.: 1001108

Airport of Departure (Addr. of First Carrier) and Requested Routing: BOMBAY

To	By First Carrier	to	by	Currency	CHGS Code	WT/VAL PPD	WT/VAL COLL	Other PPD	Other COLL	Declared Value for Carriage	Declared Value for Customs
BOSTON	SWISS AIR			INR			X		X	NVD	22998.00

Airport of Destination	Flight/Date	Amount of Insurance
BOSTON	SR-177/15?.88 MUST GO	

INSURANCE – If Carrier offers insurance, and such insurance is requested in accordance with conditions on reverse hereof, indicate amount to be insured in figures in box marked 'Amount of Insurance'

MARKS ADDRESS INFORM CNEE ON ARRIVAL OF GOODS" ENCL. DOCS.

No. of Pieces RCP	Gross Weight	kg / lb	Rate Class	Chargeable Weight	Rate / Charge	Total	Nature and Quantity of Goods (incl. Dimensions or Volume)
1	5	K	N	5	91.70	458.50	RE-EXPORT OF MDU BOARDS PART NO. T112 A WITH CABLES RBI APP.NO EC-BY-SPZ 904/3(85)/87-88 dt. 22.6.88 S.B.NO. 958/28.6.88

459.00	AWB 25.00 DISB 262.00 CH-350.00 TER.CH.19/-
394.00	
262.00	
1115.00	

Shipper certifies that the particulars on the face hereof are correct and that insofar as any part of the consignment contains dangerous goods such part is properly described by name and is in proper condition for carriage by air according to the applicable Dangerous Goods Regulations.

LEMUIR AIR EXPRESS

Signature of Shipper or his Agent

14-3-0284

28 JUNE 1988 (Date) BOMBAY (Place) LAE BOM PATADE

Signature of Issuing Carrier or its Agent

Total Collect Charges

085-6397 1283

Copy 4 for Shipper

Datamati Limited

Unit No. 38/39, SDF II, SEEPZ. (E), Bombay-400 096. India.
Tel. : +91 (22) 6370511 6370336 6 7, Telex . 3064 DCSP IN Fax : +91 (22) 6366368

FACSIMILE CORRESPONDENCE

70524

TO : MR. MICHAEL RILEY (MS 014-690)
WANG LABORATORIES INC., LOWELL FAX : 508-452-0896

FROM : S. RAMAKRISHNAN, DATAMATICS LIMITED, BOMBAY

CC : MR. PRADEEP BARTHAKUR (MS 019-690)
MS. TERRI INCA (MS 014-A3A)
WANG LABS, LOWELL, USA

DATE : AUGUST 28, 1990

SUB : MAINTENANCE OF BASIC - 2 OS ON MVP

: OUR FAX DATED AUGUST 27, 1990

1. Please refer to our fax dated August 22, 1990. We need immediately the following information on your letterhead for Indian customs to clear the shipment of 2275 controller / disk drive.

   1. Description of equipment with technical specification
   2. Name of the manufacturer with country
   3. Serial number of the machine
   4. Year of manufacturer (1985)
   5. The price at which the equipment was purchased
   6. Current value of the equipment for custom purpose only

2. We have the second MVP CPU operational with the follow

Type of board	Qnty
7587	1
7796	1
7589	1
6789	1
7797	1
6791	1
6792	1
6793	1

ICS

Please note that we do not have controller cards for terminals, floppy disk drive, phoenix / hard disk drive or printer for this CPU. You may also note that we have only one 32 K memory board for this MVP CPU.

Please advise whether we need the above mentioned controllers on the debug MVP system for the maintenance of BASIC - 2 OS.

3. We like to have the following documentation on printer drivers written by Mr. David M. Barrett of Wang Labs, USA :

1. 2200 generalised printer driver functional specs
2. 2200 generalised printer driver standard character set, control sequences and escape sequences
3. 2200 generalised printer driver design specifications

Warm regards,

(S. RAMAKRISHNAN)

Datamatics Limited

Unit No. 38/39, SDF II, SEEPZ, Andheri (E), Bombay-400 096. India.
Tel. : +91 (22) 6320511, 6324235-6-7, Telex : 011-79064 'DCSP IN' ● Fax : +91 (22) 6366368

FACSIMILE CORRESPONDENCE

TO : MR. S. RAMAKRISHNAN, WANG LABS, USA 508 458 0620
C/O MR. MICHAEL RILEY (MS 014-690)

CC : MR. MICHAEL RILEY (MS 014-690)
MR. RAY TURCOTTE (MS 014-A3A)
WANG LABS, USA

FROM : CYRUS F. NAVA, DATAMATICS LIMITED, BOMBAY

DATE : SEPTEMBER 11, 1990

AS PER YOUR REQUEST OF SEPTEMBER 10, 1990, WE ARE HEREBY SENDING YOU THE WANG INVOICE FOR THE SHIPMENT OF 2275 DISK CONTROLLER.

WARM REGARDS,

(CYRUS F. NAVA)

WANG LABORATORIES, INC.

INTERNATIONAL USE ONLY

PLEASE REMIT PAYMENT TO
WANG LABORATORIES INC.
ACCOUNT #539-13308, AT
THE BANK OF BOSTON
100 FEDERAL STREET, BOSTON, MASS 02110

INDICATE INVOICE NUMBERS WITH REMITTANCE.

INVOICE

CUSTOMER PO NUMBER	DATE	WORK ORDER NO.	DATE
	/ /		/ /

CUST NO	STATE	SALESMAN 1 EMP #	SALESMAN 1 ROB #	SALESMAN 2 EMP #	SALESMAN 2 ROB #	SALESMAN 3 EMP #	SALESMAN 3 ROB #	CAT	NO INV

NO 0801901N DATE 08/01/90

T/B# 347752
1 CTN AT 36 LBS

SOLD TO
DATAMATICS LIMITED
UNIT NO. 39 SDF II
SEEPZ, ANDHERI (EAST)
BOMBAY 400 096 INDIA

SHIP TO
ATTN: MR. S. RAMAKRISHNA

PACKING LIST NO

DATE SHIPPED
08/01/90

SHIPPED VIA
AIR FREIGHT
AWB# 64-008028

F.O.B.	TRANS. CHARGES	SHIP VIA
SP	PREPAID	FRITZ AIRFREIGHT ONE MASS TECH CENTER E. BOSTON, MA

GOVT CONTRACT

TERMS
NO CHARGE

QTY ORDERED	DESCRIPTION	PART NUMBER	QTY SHIPPED	UNIT PRICE	AMOUNT
	MSO# 400316 2275-30 DISK DRIVE (ZD 6658) SERIAL NUMBER		1		N/C
	GOODS NOT FOR SALE IN INDIA GOODS ON CONSIGNMENT FOR DEVELOPMENT PROJECT ONLY TO BE RETURNED AT COPLETION OF PROJECT.				
	VALUE FOR CUSTOMS ONLY 1,575.00/LOT				
	DIST LICENSE V1294-088 BY ORDER OF: DIGITROM COMPUTER PVT. LTD				
	THESE COMMODITIES LICENSED BY THE UNITED STATES FOR ULTIMATE DESTINATION INDIA DIVERSION CONTRARY TO U.S. LAW PROHIBITED WANG LABORATORIES INC. ERIKA BUSCHENFELDT EXPORT TRAFFIC ADMIN/tv				NO CHARGE

SUB TOTAL	
SALES TAX	
INSURANCE/FREIGHT	NO CHARGE

WE HEREBY CERTIFY THAT THESE GOODS WERE PRODUCED IN COMPLIANCE WITH THE FEDERAL FAIR TRADE PRACTICES ACT.

CLAIMS FOR SHORTAGES MUST BE MADE WITHIN TEN DAYS AFTER RECEIPT OF MERCHANDISE. PLEASE DO NOT RETURN MERCHANDISE WITHOUT OUR WRITTEN AUTHORIZATION.

CUSTOMER COPY

ONE INDUSTRIAL AVENUE, LOWELL, MASS. 01851 U.S.A.
TEL. (508) 459 5000

To: Mr. Michael Riley (M/S 014-690)

From: S. Ramakrishnan

Date: 10 Sept., 1990

Sub: Status of 2258 L.C.O maintenance

---

1. Accomplishment during last week:

   (a) I reported for the assignment on 4 Sept., 1990.
   (b) I was reading design documentation on 2258 L.C.O.
   (c) MVP 2200 system with 2258 L.C.O was made available on 6 Sept., 1990.
   (d) I was studying the BASIC source code for 2258 L.C.O.

2. Plan for the current week:

   (a) Continue with the study of design documentation and, BASIC source code for 2258 L.C.O.
   (b) Understand and reproduce some of the PTRs reported against 2258 L.C.O.

3. Requirement:

   (a) A detailed list of PTRs outstanding against 2258 L.C.O.

Datamatics Limited

Unit No. 38/39, SDF II, SEEPZ, Andheri (E), Bombay-400 096. India.
Tel. : +91 (22) 6320511, 6324235-6-7, Telex : 011-79064 'DCSP IN' ● Fax : +91 (22) 6366368

FAX TO : 001 508 458 0620 25 OCTOBER, 1990.

TO : MR. MICHAEL RILEY (MS 014-690)
WANG LABS, USA.

CC : MR. S. RAMAKRISHNAN (MS 014-A3A)
MR. PRADEEP BARTHAKUR (MS 019-690)
MR. TERRY INCA (MS 014-A3A)
MR. RAY TURCOTTE (MS 014-A3A)

FROM : CYRUS F. NAVA, DATAMATICS LIMITED, BOMBAY

---

1. WE HAVE CLEARED THE 2275 CONTROLLER/DISK DRIVE AND SUCCESSFULLY INTERFACED THE UNIT WITH OUR 2200 SYSTEM USING THE EXISTING TRIPLE CONTROLLER CARD.
WE HAVE 2 TRIPLE CONTROLLER CARDS - ONE IS USED FOR THE 8 INCH FLOPPY DRIVE AND THE OTHER FOR THE PHOENIX / 2275D (WINCHESTER). IT WOULD HELP IF WE CAN HAVE ONE MORE TRIPLE CONTROLLER CARD SO THAT WE CAN USE ALL THE 3 PERIPHERALS.

2. PRINTER DRIVER BUG / LIMITS BUG:
WE HAVE REPRODUCED THE LIMITS BUG. WE NEED THE FOLLOWING CLARIFICATION:

THE LIMITS STATEMENT GIVES THE FOLLOWING FILE STATUS FOR THE VARIOUS TYPES OF FILES:

FILE TYPE	STATUS CODE GIVEN	STATUS AS GIVEN IN YOUR FAX/ MAY 5, 1990
PROGRAM FILE	1	2
SCRATCHED PROGRAM FILE	-1	-2
DATA FILE	2	1
SCRATCHED DATA FILE	-2	-1
PROGRAM FILE (CS 386)	2	1
SCRATCHED PROGRAM FILE (CS 386)	-2	-1

3. THERE WAS A HEADCRASH ON OUR PHOENIX DISK DRIVE CONNECTED TO THE MVP 2200 WHEN THE 'MICROCODE DEVELOPMENT SYSTEM' PLATTER WAS MOUNTED. OUR ENGINEERS ARE REPAIRING THE DRIVE AND WE HOPE TO HAVE IT OPERATIONAL SOON.

4. WE HAVE ALSO CLEARED THE MDU BOARDS & CABLES.

5. WE ARE AWAITING THE DOCUMENTATION MENTIONED IN OUR FAX DATED AUGUST 28, 1990 TO MR. RILEY.

WARM REGARDS,

(CYRUS F. NAVA)

Datamatics Limited

Unit No. 38/39, SDF II, SEEPZ, Andheri (E), Bombay-400 096. India.
Tel. : +91 (22) 8320511, 6324235-6-7. Telex : 011-79064 'DCSP IN' @ Fax : +91 (22) 6366368

TO : MR. MICHAEL RILEY (M/S 014-690) 70524
WANG LABORATORIES INC., LOWELL, U.S.A.

FAX NO: 508-458-0620

CC : MR. PRADEEP BARTHAKUR (M/S 019-690B)
MS. TERRI INCA (M/S 014-A3A)
WANG LABORATORIES INC., LOWELL, U.S.A.

FROM : S. RAMAKRISHNAN,

DATE : NOVEMBER 19, 1990

SUB : STATUS OF BASIC-2 MAINTENANCE

REF : YOUR FAX DTD 14TH NOV. 1990.

---

1) WE HAVE FABRICATED THE CABLES CONNECTING TO 2250 BOARDS AS SUGGESTED BY YOU. THE CABLES ARE ONE TO ONE PIN CONNECTIONS. THE CABLES ARE IN PLACE FOR 2600 MICRO-CODE DEVELOPMENT SYSTEM.

2) WE HAVE TRYING TO BOOT 2600MICROCODE DEVELOPMENT SYSTEM. LIST NOTE TO THE ATTACHED SHEET.

WE ARE ABLE TO EXECUTE THE STEPS UPTO c) FROM PARTITION NO1 OF THE HOST SYSTEM. b) SELECT AND RUN THE PROGRAM "2600 MDU" FROM THE MENU. BUT THE NEXT STEP c) PRESS SPECIAL FUNCTION KEY 15FAILS TO PRODUCE ANY RESULT.

WE ARE DEBUGGING THE 2600 MICROCODE DEVELOPMENT SYSTEM.

3) WE ARE AWAITING THE SHIPMENT OF DOCUMENTATION YOU HAVE PROMISED.

Mike,
I am not able to get your fax line for the last two days.

WARM REGARDS,

S. RAMAKRISHNAN

How To Boot [illegible] 2600 Microcode Development System

A) Boot the HOST system as a normal MVP.

B) Boot the Target system with the file "@MDU" - This is done by typing "@MDU" then pressing the Special Function Key corresponding to the platter containing the file "@MDU". At this point a load message will be displayed and the system will appear to hang.

C) From Partition #1 of the HOST system:
   a) select the platter containing the 2600 Microcode Development System as the default disk, and enter "LOADRUN".
   b) Select and run the program "2600 MDU" from the menu.
   c) Press Special Function Key 15 (SF'15) to halt the TARGET CPU.
   d) Using SF'8, load the Operating System into the TARGET system.
   e) Using SF'22, disable checksums by changing location Hex(000F) to Hex(800000)
   f) Using SF'30, set the Instruction Counter to Hex(0003).
   g) Press SF'31 to begin execution of the Operating System in the TARGET CPU.

   NOTE at this point the words "2600 Executing..." should appear in the upper left corner of the #1 terminal on the HOST system. If this does not happen, use the following procedure at the #1 terminal on the HOST system:

      1) After following the above steps, press "Shift Reset"
      2) enter "CLEARV"
      3) enter "RUN"
      4) use SF'30 to set the Instruction Counter to Hex(0003)
      5) press SF'31

D) From partition #1 of the TARGET system: now follow the normal power-up sequence to configure the system.

2021

Da[illegible]s Limited

Unit No. 38/39 [illegible] (E), Bo[illegible] -400 0[illegible]6, India
Te[illegible] (22) 6320511, 63[illegible] [illegible]9064 DCS[illegible] IN ● Fax : +91 (22) 6366368

FAC[illegible] [illegible]SPONDENCE

No. of pages: 45

TO : MR. MICHAEL RILEY
WANG LABORATORIES INC., LOWELL, U.S.A.
(M/S : 014-690)

FAX NO: 508-458-0620

CC : MR. PRADEEP BARTHAKUR (M/S 019-69B)
MS. TERRI INCA (M/S 014-A3A)
WANG LABORATORIES INC., LOWELL, U.S.A.

[illegible] : S. RAMAKRISHNAN

DATE NOVEMBER 26, 1990

SUB 2600 MICROCODE DEVELOPMENT SYSTEM

REF : OUR FAX DTD. 19TH NOVEMBER, 1990

[illegible] WE ARE STILL HAVING PROBLEMS WITH 2600 MICROCODE DEVE[illegible] [illegible]TEM. DURING DEBUG SYSTEM SET UP THE PROGRAMME "26[illegible] TRIES TO COMMUNICATE WITH 2250 AT THE ADDRESS 0FA (PLEASE [illegible] TO THE DIAGRAM ATTACHED). THE KEYIN STATEMENT GETS X'2[illegible] 2250 AS RESPONSE. APPARENTLY THERE IS NO COMMUNICATION [illegible] PLACE BETWEEN 2250 (AT ADDRESS 0FA) IN THE HOST SYSTEM AN[illegible] 2250(AT ADDRESS 0FE) IN THE TARGET SYSTEM.

[illegible]HERE ARE 2 DIP SWITCHES SW1 AND SW2 ON THE MDU BOARD (T[illegible] PLEASE LET US KNOW THE CORRECT SETTINGS FOR THESE DIP SWI[illegible]

PLEASE REFER TO THE SHEETS, "2600 MI[illegible]ROCODE DEVELOPMEN[illegible] AND "ORDER OF BOARDS IN THE [illegible]PU OF THE TARGET SYSTE[illegible] 2600 MICROCODE DEVELOPMENT SYSTEM". THERE IS A STATE[illegible] JUMPER ON THE 2600 MOTHER BOARD IS ADDED FOR DISABLIN[illegible] MEMORY" IN "2600 MICROCODE DEVELOPMENT SYSTEM". IS TH[illegible] SAME AS 16 PIN RIBBON CABLE INDICATED IN "ORDER OF THE B[illegible] IN CPU OF THE TARGET SYSTEM OF THE 260 MICROCODE DEVELOPMENT SYSTEM?".

WE WOULD VERY MUCH APPRECIATE AN EARLY RESPONSE FROM YOU IN THIS REGARD.

WARM REGARDS,

S. RAMAKRISHNAN

Sent on 26/11
Mr.

WANG LABORATORIES, INC

2600 MICROCODE DEVELOPMENT SYSTEM
January 11, 1977
Revised October 21, 1979

I. SYSTEM DESCRIPTION

The 2600 MDS is a combination of hardware and software that provides the user with convenient 2600 microcode debug capability. Registers, data and instructions within the 2600 can be examined and modified. Execution can be started and stopped at specified instructions or single stepped, and register dumps can be performed at specified instructions.

The 2600 MDS hardware consists of a debug system coupled to a modified 2600. The debug system is a standard 64K 2200VP or 2200MVP with a 56K partition, a terminal with a 24x80 CRT, and two 2250's. The working 2600 is a standard 2600 with CRT, keyboard, disk, 2250 and at least 24K of control memory. One of the control memory boards is replaced by the MDU (microcode development unit) board and a jumper on the 2600 motherboard is added for disabling control memory. Typically, the 2200's are multiplexed to a floppy disk and to a 10 MB disk.

The debug 2200 may, optionally be equiped with an MDU clock, which is used for execution timing. The MDU clock is a 2228B controller loaded with a timer microprogram. The MDU clock is connected to the MDU board in the 2600.

ONE INDUSTRIAL AVENUE LOWELL MASSACHUSETTS 01851 • TEL (617) 851-4111 • TWX 710-343-6769 • TELEX

WANG LABORATORIES, INC.

4680TZ

2600 MICROCODE DEVELOPMENT SYSTEM
January 31, 1977
Revised October 21, 1979

I. SYSTEM DESCRIPTION

The 2600 MDS is a combination of hardware and software that provides the user with convenient 2600 microcode debug capability. Registers, data and instructions within the 2600 can be examined and modified. Execution can be started and stopped at specified instructions or single stepped, and register dumps can be performed at specified instructions.

The 2600 MDS hardware consists of a debug system coupled to a modified 2600. The debug system is a standard 64K 2200VP or 2200MVP with a 2 partition, a terminal with a 24x80 CRT, and two 2250's. The working 2600 is a standard 2600 with CRT, keyboard, disk, 2250 and at least 2 of control memory. One of the control memory boards is replaced by the MDU (microcode development unit) board and a jumper on the 260 motherboard is added for disabling control memory. Typically, the 2200's are multiplexed to a floppy disk and to a 10 MB disk.

The debug 2200 may, optionally be equiped with an MDU clock, which is used for execution timing. The MDU clock is a 2200B controller loaded with a timer microprogram. The MDU clock is connected to the MDU board in the 2600.

HOST

DEBUG SYSTEM

TARGET

2600

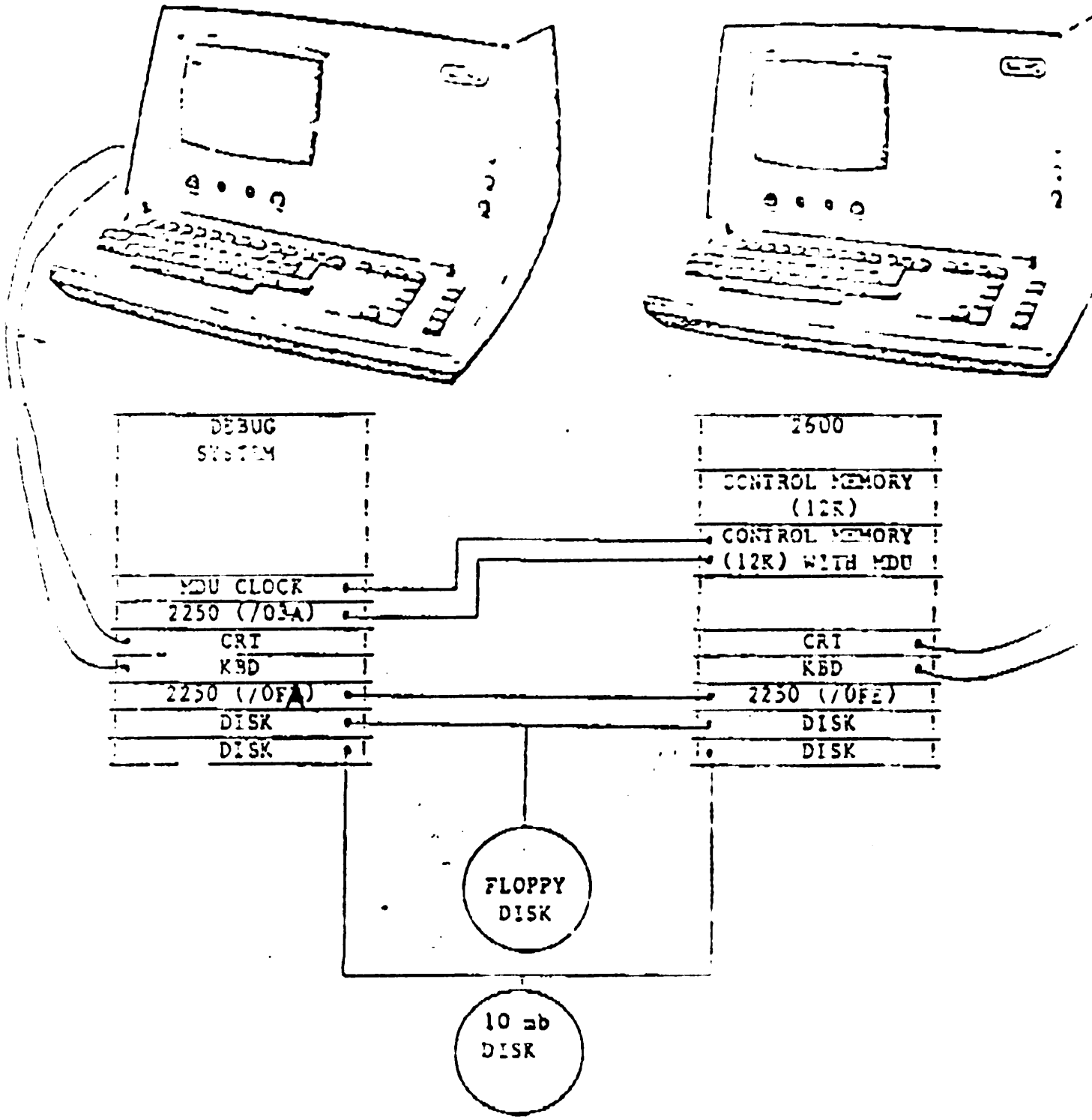

O[illegible] ards in the CPU of the [illegible]
of [illegible] 600 M[illegible]ocode [illegible]evelopment System

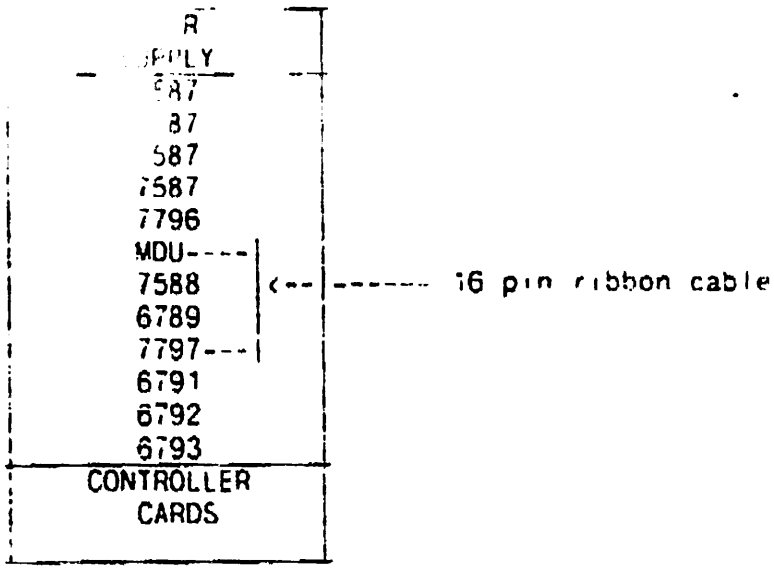

ata tics Limit

No Andheri (E), Bom 96. India.
Tel. +91 (2 20 011-7 DCSP ax : +91 (22) 6366368

No. of pages: 4

FA E

TO : MR. MICH LEY
WANG LAB RIES INC., LOWELL, U.S.A.
(M/S : 01)

FAX NO 458-0620

CC : MR. PRADEEP BARTHAKUR (M/S 019-69B)
MS. TERRI INCA (M/
WA ORATORIES U.S.A.

FROM SHN

DATE 1990

SUB 2600 MI DEV SYSTEM

REF OUR FAX DTD. 19TH

1) PROBLEMS WITH
SYSTEM SET

2) CHES
CORRE

THE SHEETS, ODE
ARDS IN THE RGET
VELOPMENT SYSTEM
HE 2600 MOTHER BOARD
MICR DEVELOPM
INDICATE
OF

WE
REGA

WARM R

S. RAMAKRISHN

WANG LABORATORIES

2600 MICROCODE DEVELOPMENT SYSTEM

January 11, 1977
Revised October 21, 1979

I. SYSTEM DESCRIPTION

The 2600 MDS is a combination of hardware and software that provides the user with convenient 2600 microcode debug capability. Registers, data, and instructions within the 2600 can be examined and modified. Execution can be started and stopped at specified instructions or single stepped, and register dumps can be performed at specified instructions.

The 2600 MDS hardware consists of a debug system coupled to a modifie 2600. The debug system is a standard 64K 2200VP or 2200MVP with a partition, a terminal with a 24x80 CRT, and two 2250's. The wor 2600 is a standard 2600 with CRT, keyboard, disk, 2250 and at least of control memory. One of the control memory boards is replaced by MDU (microcode development unit) board and a jumper on the motherboard is added for disabling control memory. Typically, 2200's are multiplexed to a floppy disk and to a 10 MB disk.

The debug 2200 may, optionally be equiped with an MDU clock, wh used for execution timing. The MDU clock is a 2228B controller with a timer microprogram. The MDU clock is connected to the MDU in the 2600.

ONE INDUSTRIAL AVENUE LOWELL MASSACHUSETTS 01851 • TEL (617) 851-4111 • TWX 710-343-6769 •

WANG LABORATORIES, INC.

2600 MICROCODE DEVELOPMENT SYSTEM
January 11, 19[illegible]
Revised October 21, 1979

I. SYSTEM DESCRIPTION

The 2600 MDS is a combination of hardware and software that provides the user with convenient 2600 microcode debug capability. Registers, data and instructions within the 2600 can be examined and modified. Execution can be started and stopped at specified instructions or single-stepped, and register dumps can be performed at specified instructions.

The 2600 MDS hardware consists of a debug system coupled to a modified 2600. The debug system is a standard 64K 2200VP or 2200MVP with a 5[illegible] partition, a terminal with a 24x80 CRT, and two 2250's. The worker 2600 is a standard 2600 with CRT, keyboard, disk, 2250 and at least 2[illegible] of control memory. One of the control memory boards is replaced by the MDU (microcode development unit) board and a jumper on the 2600 motherboard is added for disabling control memory. Typically, the 2200's are multiplexed to a floppy disk and to a 10 MB disk.

The debug 2200 may, optionally be equiped with an MDU clock, which is used for execution timing. The MDU clock is a 2238B controller loaded with a timer microprogram. The MDU clock is connected to the MDU board in the 2600.

HOST

TARGET

DEBUG SYSTEM

2500

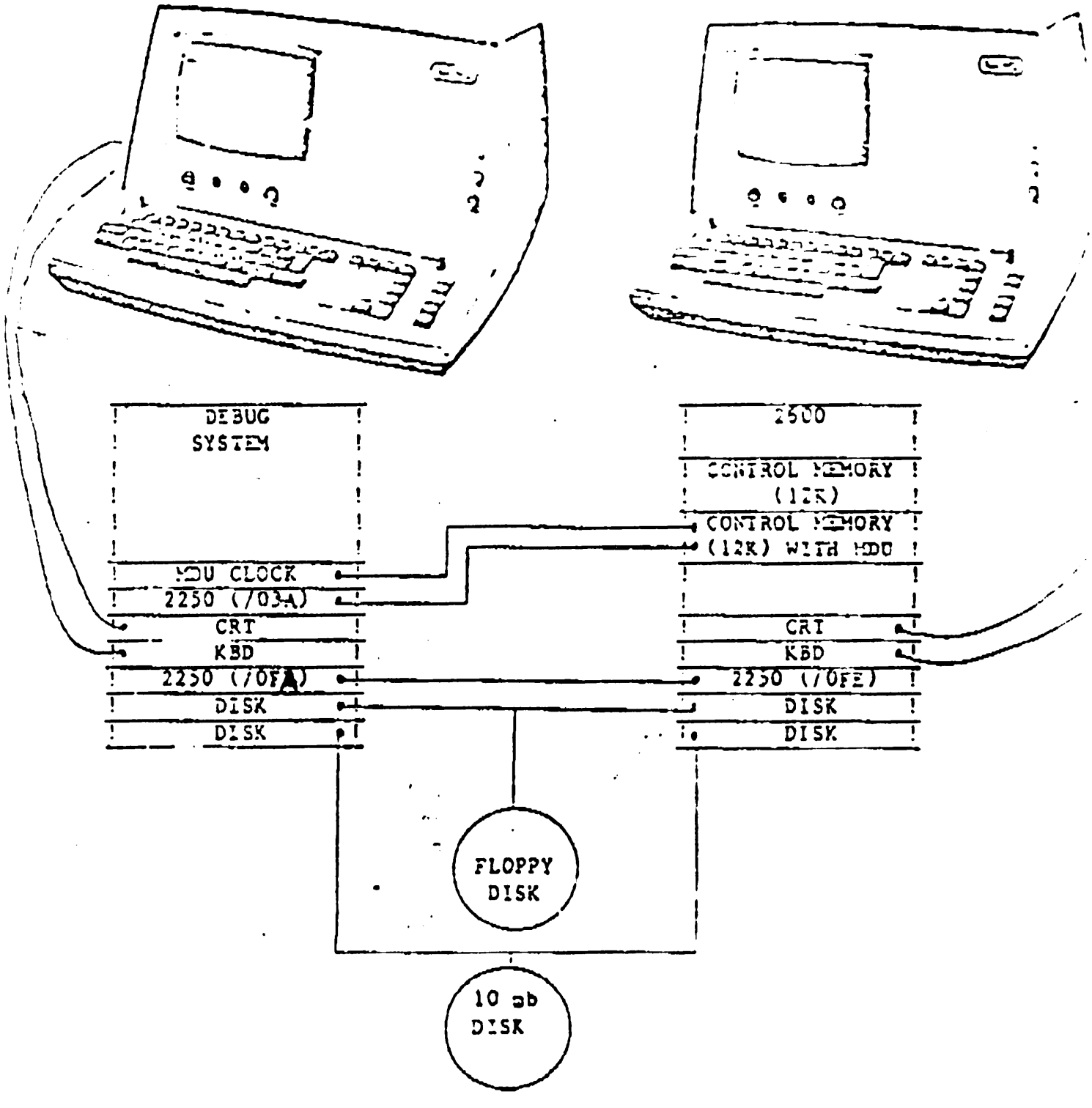

Order of Boards in the CPU of the TARGET System of the 2600 Microcode Development System

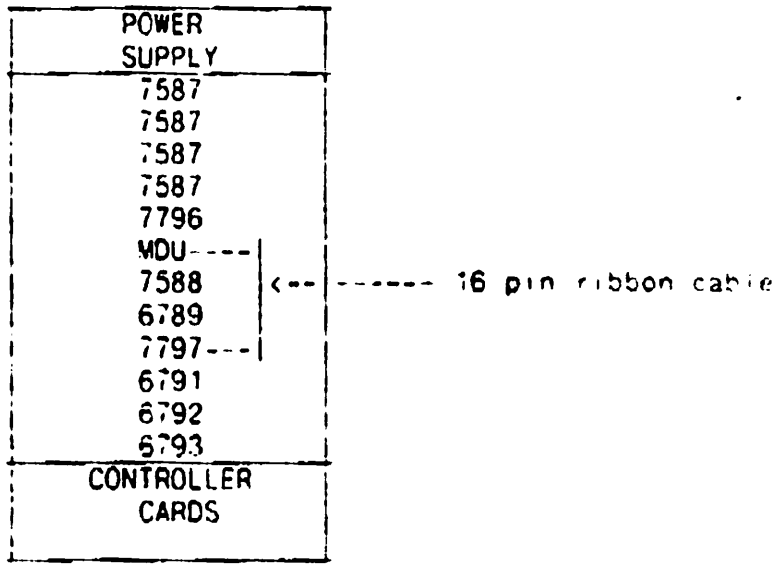

Datamatics Limited

Unit No. 38/39, SDF II, SEEPZ, Andheri (E), Bombay-400 096. India.
Tel. : +91 (22) 6320511, 6324235-6-7, Telex : 011-79064 'DCSP IN' ® Fax : +91 (22) 6366368

FACSIMILE CORRESPONDENCE

No. of pages: 5

TO : ~~MR. MICHAEL RILEY~~ 70524
~~WANG LABORATORIES~~ INC., LOWELL, U.S.A.
~~(M/S : 014-690)~~

FAX NO: 508-458-0620

CC : MR. PRADEEP BARTHAKUR (M/S 019-69B)
MS. TERRI INCA (M/S 014-A3A)
WANG LABORATORIES INC., LOWELL, U.S.A.

FROM : S. RAMAKRISHNAN

DATE : NOVEMBER 26, 1990

SUB : 2600 MICROCODE DEVELOPMENT SYSTEM

REF : OUR FAX DTD. 19TH NOVEMBER, 1990

---

1) WE ARE STILL HAVING PROBLEMS WITH 2600 MICROCODE DEVELOPMENT SYSTEM. DURING DEBUG SYSTEM SET UP THE PROGRAMME "2600 MDU" TRIES TO COMMUNICATE WITH 2250 AT THE ADDRESS 0FA (PLEASE REFER TO THE DIAGRAM ATTACHED). THE KEYIN STATEMENT GETS X'20 FROM 2250 AS RESPONSE. APPARENTLY THERE IS NO COMMUNICATION TAKING PLACE BETWEEN 7250 (AT ADDRESS 0FA) IN THE HOST SYSTEM AND THE 7250(AT ADDRESS 0FE) IN THE TARGET SYSTEM.

2) THERE ARE 2 DIP SWITCHES SW1 AND SW2 ON THE MDU BOARD (T112). PLEASE LET US KNOW THE CORRECT SETTINGS FOR THESE DIP SWITCHES.

3) PLEASE REFER TO THE SHEETS, "2600 MICROCODE DEVELOPMENT SYSTEM" AND "ORDER OF BOARDS IN THE CPU OF THE TARGET SYSTEM OF THE 2600 MICROCODE DEVELOPMENT SYSTEM". THERE IS A STATEMENT, "A JUMPER ON THE 2600 MOTHER BOARD IS ADDED FOR DISABLING CONTROL MEMORY" IN "2600 MICROCODE DEVELOPMENT SYSTEM". IS THE JUMPER SAME AS 16 PIN RIBBON CABLE INDICATED IN "ORDER OF THE BOARDS IN CPU OF THE TARGET SYSTEM OF THE 260 MICROCODE DEVELOPMENT SYSTEM?".

WE WOULD VERY MUCH APPRECIATE AN EARLY RESPONSE FROM YOU IN THIS REGARD.

WARM REGARDS,

S. RAMAKRISHNAN

Sent on 26/11
Mr:

2

original fig. 2 was garbled but same info.

WANG LABORATORIES, INC.

46807

2600 MICROCODE DEVELOPMENT SYSTEM
January 11, 1977
Revised October 21, 1979

I. SYSTEM DESCRIPTION

The 2600 MDS is a combination of hardware and software that provides the user with convenient 2600 microcode debug capability. Registers, data, and instructions within the 2600 can be examined and modified. Execution can be started and stopped at specified instructions or single stepped, and register dumps can be performed at specified instructions.

The 2600 MDS hardware consists of a debug system coupled to a modified 2600. The debug system is a standard 64K 2200VP or 2200MVP with a 56K partition, a terminal with a 24x80 CRT, and two 2250's. The working 2600 is a standard 2600 with CRT, keyboard, disk, 2250 and at least 24K of control memory. One of the control memory boards is repla[illegible] the MDU (microcode development unit) board and a jumper on [illegible] 2600 motherboard is added for disabling control memory. Typically, the 2200's are multiplexed to a floppy disk and to a 10 MB disk.

The debug 2200 may, optionally be equiped with an MDU clock, which is used for execution timing. The MDU clock is a 2228B controller loaded with a timer microprogram. The MDU clock is connected to the MDU board in the 2600.

Hardware:

MDU = HOST On desk right.

```
1 terminal needed on port 1
'   -- 2250 link to "TARGET" system.
'20 -- multiplexed to DS cabinet system disk.
'10 -- 2275 on shelf to right of MDU cpu.

Power up CPU   type   @MDU    key sf. '2 to load "@MDU" from D21.
Display will show :
```

MVP = TARGET. On desk left. D21 and D61.

```
'   -- 2250 link to "HOST" system.
'20 -- multiplexed to DS cabinet system disk.
'10 -- 2275 on shelf to right of MDU cpu.

Power up CPU                  key sf. '2 to load "@MVP" from D21.
```

Possible configuration for TARGET system:

```
3T-MUD   (3)  1. 30.5 -1     2. 30.5-3      3. 56 -2
    /215 /310 /320 /330  /0FA /0FB /0FC /0FD /0FE  /03A /03B /03C /03D /03E
    /07C /07D /07E /07F  /018 /340 /77B /A04

Cabling --
Host system --
    In cpu slot  EXT MEM CNTL  place a 7307 R0 board.
         set address switch  87654321
         sw 1 on bottom left ddddddud = x'FD'
         sw 2 on bottom mid. ddduuuuu = x'E0'
         16 pin ribbon cable (red line up) in top left socket above 7307 etch.
    In cpu slot  CNTL MEM 2    place a 7797 R0 board.
         16 pin ribbon cable from 7307 R0 board to socket J1 (red line up).
    In I/O slot near ALU place 2250 board, set address x'FE'

Target system --
    In I/O slot 2250 board #1, set address x'FA'
    In I/O slot 2250 board #2, set address x'3A'

Inter computer cabling via Disk/printer (one to one) cable
    Host 7307-R0    via one-to-one cable   to   Target  2250 on '3A'
    Host 2250 'FE'  via one-to-one cable   to   Target  2250 on 'FA'
```

Datamatics Limited

Unit No. 38/39, SDF II, SEEPZ, Andheri (E), Bombay 400 096. India.
Tel. : +91 [illegible] 20511, 6324235-6-7, Telex : 011-79064 'DCSP IN' ⊕ Fax : +91 (22) 6386368

FACSIMILE CORRESPONDENCE

NO. OF PA[illegible]

: MR. MICHAEL RILEY
WANG LABS. INC., LOWELL, U.S.A.

FAX: 508-458-0620

: MR. PRADEEP BARTHAKUR (M/S 019-698)
MR. MAHENDRA SHIRALI (M/S 013-790)

: S. RAMAKRISHNAN
: NOVEMBER 30, 1990
: 2600 MICROCODE DEVELOPMENT SYSTEM
: YOUR PURCHASE ORDER NO. U4 W279291. OF
[illegible]TH NOVEMBER.

[illegible]WARE SET-UP FOR 2600 MICROCODE DEVELOPMENT SYSTEM:

[illegible]HARDWARE WAS SET UP EXACTLY ACCORDING TO THE SPECIFICATION [illegible] YOUR FAX DTD. NOVEMBER [illegible] 990.

[illegible] THE MDU CARD IN THE EXTERNAL MEMORY CONTROL SLOT, THE [illegible]SAGE "MOUNT SYSTEM", PRESS RESET" DURING POWER ON DOES NOT [illegible]PEAR ON THE MDU SYSTEM. THUS WE ARE NOT ABLE TO LOAD "@MDU"; [illegible] WE [illegible] NOT PROCEED FURTHER.

[illegible] MDU CARD [illegible] THE CONTROL MEMORY 2 SLOT (WITH OTHER CONNECTIONS AS IN OLD NOTES) PERMITS [illegible] THE MDU SYSTEM WITH "@MDU". THE FOLLOWING MESSAGE "MDU UTILITY [illegible]/13/1981" APPEARS ON THE SCREEN.

CONTD....2/

AT: 8

- 2 -

WHEN PROGRAM "2600MDU" IS EXECUTED ON THE HOST SYSTEM, IT DISPLAYS A MESSAGE ON THE SCREEN "2600 EXECUTING...." BUT GIVES NO RESPONSE TO SF'15 KEY (OR ANY OTHER KEY EXCEPT RESET)

Hit Reset First Then SF'15

Do not Load A04 into Dev. Table

THE M[illegible] [illegible]M DOES NOT ACCEPT THE DEVICE ADDRESS ,A04 MENTIONED IN THE CONFIGURATION IN YOUR FAX. [illegible]SE CLARI[illegible] THE LINE "3T MUP [illegible] 1. 30.5 [illegible] 2. 30. [illegible]

THE FIRST LINE IN [illegible] CONFIGURATION STANDS FO[illegible] THIS AN[illegible] DEVICE ADDRESS /A04 [illegible] NE[illegible] [illegible]Y F[illegible] SUCCESSFUL START

GENERATING BOOTABLE MICRO[illegible]:

[illegible]MBLER USED WITH THE [illegible] AS MENTIONED IN THE [illegible] USING LIST FILE "[illegible] IN AN OBJECT FILE [illegible] 667 SECTORS. THE EXI[illegible] [illegible] IS [illegible] SECTORS. NO CHANGES WERE MADE I[illegible] [illegible] OR IN [illegible] SOURCE FILES SENT TO US AND THE [illegible]

A[illegible] [illegible] DOCUMENTA[illegible] [illegible]ASE [illegible] [illegible] [illegible]AGE IF [illegible] SECTORS [illegible] 400, [illegible] "[illegible] [illegible] HO[illegible] THIS DONE? ("@328 IS A [illegible] [illegible] ALSO EXPLAIN THE STATEMENT "REMAKE [illegible] [illegible] DO NOT KNOW WHERE THIS 'm' PARAMETER [illegible] [illegible] PROCEDURE.

[illegible] WITH THE [illegible] "[illegible] [illegible] NEWLY GENERATED "@MVP" [illegible]

CONTD....3/

You are Not Generating check Sums
There is a MDU Com. To do This,

[illegible] FIRST [illegible] BOTH THE FILES ARE [illegible] THE [illegible].

[illegible] FROM THE [illegible], MODULE NAMES [illegible]

QUATES", "MOD [illegible] "QUATES"... ARE [illegible] APPEAR [illegible]

IN THE OBJECT CODE WHICH IS NOT [illegible] "[illegible]" FILE.

[illegible] WHEN SYSTEM IS BOOTED USING [illegible]

MODULE NAME ONE BY ONE AN[illegible] [illegible]

[illegible] EFF[illegible].

[illegible] T[illegible] [illegible] AN [illegible]

[illegible] A BOOTABLE MICRO[illegible]

[illegible] MUCH APPRECIATE [illegible]

[illegible]

[illegible] WE WERE UNABLE TO GET [illegible]

[illegible] 21, 197[illegible] [illegible] WAS [illegible]

[illegible] MAILED TO YOU.

[illegible],

[illegible]

[illegible]AMARS[illegible]

PAGE 2.

CS/2200 OS Modification Notebook: Page 2 b

S/2200 OS Assembly (as performed from CS Terminal 1).

or print output -- run assembly capturing print output to 21[illegible]
or non-print -- run assembly capturing print output to 0[illegible]

[illegible] Microcosm utilities
[illegible] Block Assembler

[illegible]	Assembler output	000 or 215
	Source [illegible]	D61
	External symbols	D61
	Object file	D61
	Block work file	D61

File Names

Object	MVP@ or [illegible]
Block Work file	TBWR.TMP
Starting Module	22MVP

[illegible] the code in order [illegible] Respond [illegible]
[illegible] it is faster and works
[illegible] choose Y, it is slower and does not work anyway (BP)

Assembler	004
Source	D61
External symbols	D61
Object	D21 or D61
Block work file	D61

File Names:

OBJECT	MVP@
	TOWR.TMP
START ...	22MVP

margin notes:
Source file is "22MVP" which holds a list of files to assemble.
Object file is ""MVP@"

[illegible] On desk [illegible]
[illegible] On desk [illegible]

[illegible]

[illegible]

[illegible] output:

[illegible] should be about 350 sectors.

[illegible] output [illegible] 400 sectors [illegible]
[illegible] around [illegible]
[illegible] probably [illegible]
[illegible]
[illegible] Remake using [illegible] parameter.

[illegible] Wang Laboratories, Inc. 1986 [illegible]
[illegible] Wang Laboratories, Inc. 1986

[illegible] modified after final beta testing [illegible]
[illegible] output
[illegible] end [illegible]
Re-compile

Datamatics Limited

Unit No. 38/39, SDF II, SEEPZ, Andheri (E), Bombay-400 096. India.
Tel. : +91 (22) 6320511, 6324235-6-7, Telex : 011-79064 'DCSP IN' ● Fax : +91 (22) 6366368

NO. OF PAGES:5

FACSIMILE CORRESPONDENCE

TO : MR. TYLER OLSEN, M/S: 014-890
WANG LABS, LOWELL, U.S.A.

FAX NO: 508-458-0620

CC : MR. MICHAEL RILEY, M/S: 014-690
MR. PRADEEP BARTHAKUR, M/S: 013-69B
MR. MAHENDRA SHIRALI, M/S: 013-790

FROM : S. RAMAKRISHNAN
DATE : DECEMBER 10, 1990
SUB : 2600 MICROCODE DEVELOPMENT SYSTEM
REF : YOUR PURCHASE ORDER NO. U4 W279291 AND YOUR FAX DTD 6TH DECEMBER 1990.

---

1) HARDWARE SET-UP FOR 2600 MICROCODE DEVELOPMENT SYSTEM:

WE SETUP THE 2600 MICROCODE DEVELOPMENT SYSTEM AS SUGGESTED IN OUR FAX DTD. 6TH DECEMBER 1990. PLEASE REFER TO FIG.3/SET-UP-II. THE SYSTEM DOES NOT BOOT WITH THE SET-UP SUGGESTED BY YOU.

WE HAVE SETUP 2600 MICROCODE DEVELOPMENT SYSTEM AS SHOWN IN SET-UP-I/FIG.1&2. IN THIS CASE WE ARE ABLE TO BOOT TARGET SYSTEM AND RUN @MDU. WE ARE ABLE TO BOOT THE HOST SYSTEM AND RUN 2600MDU, BUT THE SYSTEM FAILS TO RESPOND TO ANY OF THE FUNCTION KEYS.

PLEASE EXAMINE THE SET-UP-I/FIG.1&2 AND LET US KNOW IF ANYTHING IS MISSING. WE ALSO LIKE TO KNOW WHETHER THERE IS ANY JUMPER ON THE MOTHER BOARD.

2) GENERATING BOOTABLE MICROCODE:

PLEASE REFER TO OUR FAX DTD. 27TH NOVEMBER, 1990. WE GENERATED AN OBJECT FILE BY ASSEMBLING THE SOURCE CODE FOR BASIC-2. THE GENERATED OBJECT FILE DIFFERS IN SIZE WHEN COMPARED TO "@MVP" BOOTABLE FILE EXISTING ON THE SYSTEM.

CON[illegible]2/

WE WOULD LIKE TO KNOW THE PROCEDURE TO CONVERT THE OBJECT CODE GENERATED BY THE BLOCK ASSEMBLER TO A BOOTABLE MICROCODE FILE.

WE WOULD VERY MUCH APPRECIATE AN IMMEDIATE RESPONSE FROM YOU IN THIS REGARD.

REGARDS,

(S. RAMAKRISHNAN)

SET-UP I

MDU = TARGET

Setting of Boards within TARGET system :

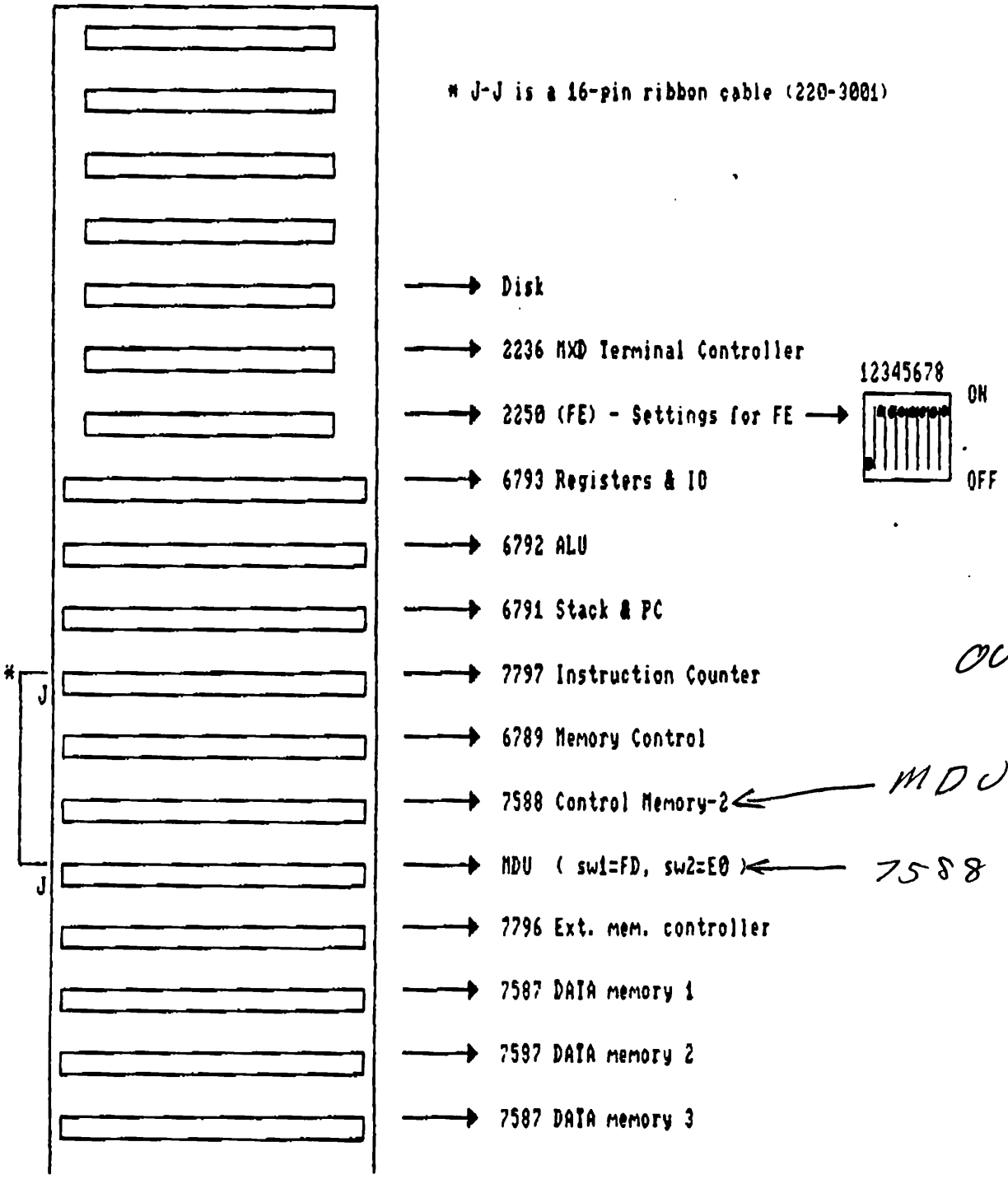

FIG - 1

For this setup TARGET system boots with @MDU file and displays message "MDU UTILITY 07/13/1981" and appears to hang.

SET-UP I

HOST CPU Configuration :

OUR SYS

MXE

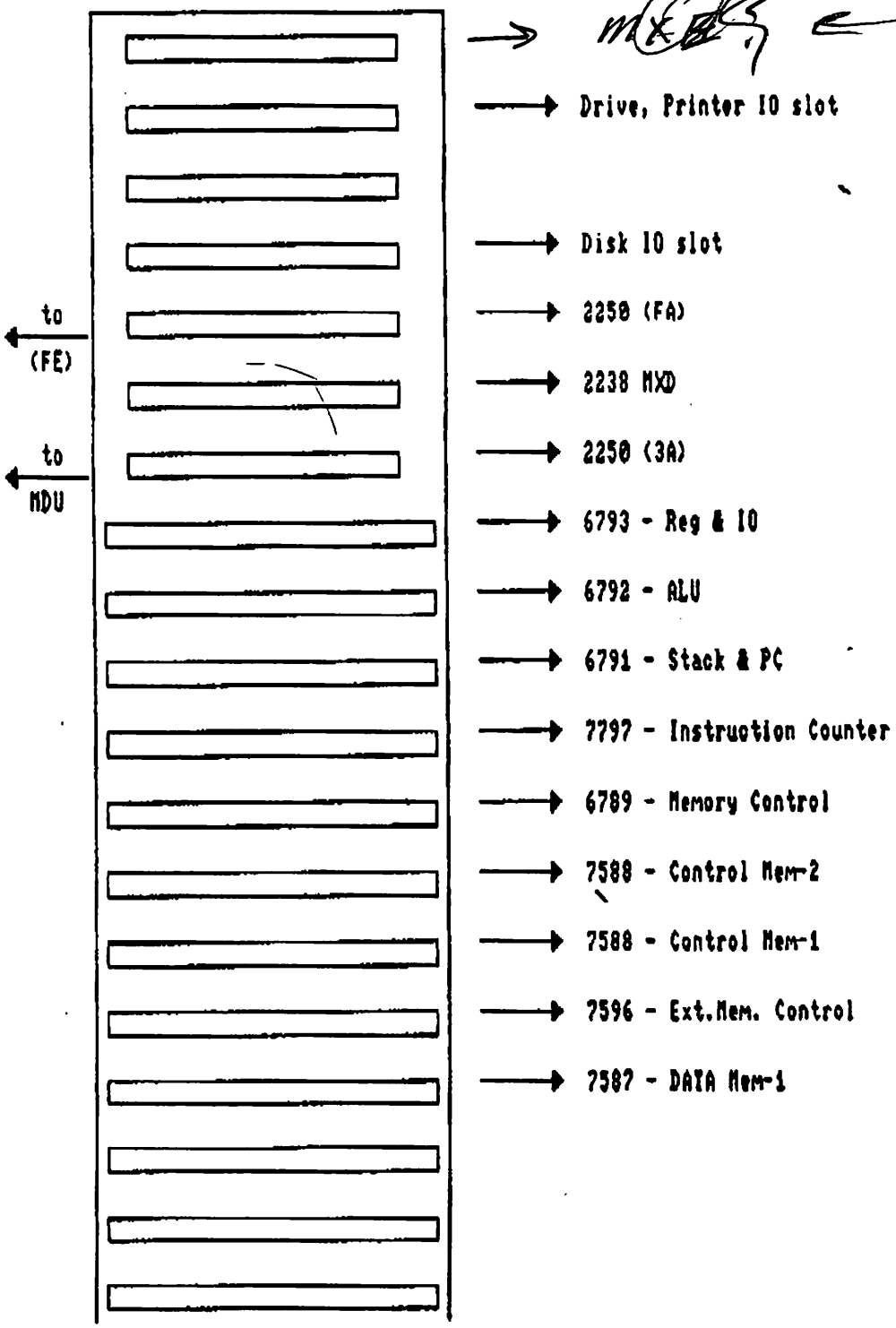

FIG - 2

System boots @MUP and when program 2600MDU is executed, it displays "2600 Executing ..." but gives no response to FUNCTION KEYS.

TRY

ON HOST SYS

DO "RESET" + RUN

Return + SF. 15

SET-UP II

MDU = TARGET Set up as suggested in FAX Dated 6th Dec. 1990.

Setting of Boards within TARGET system :

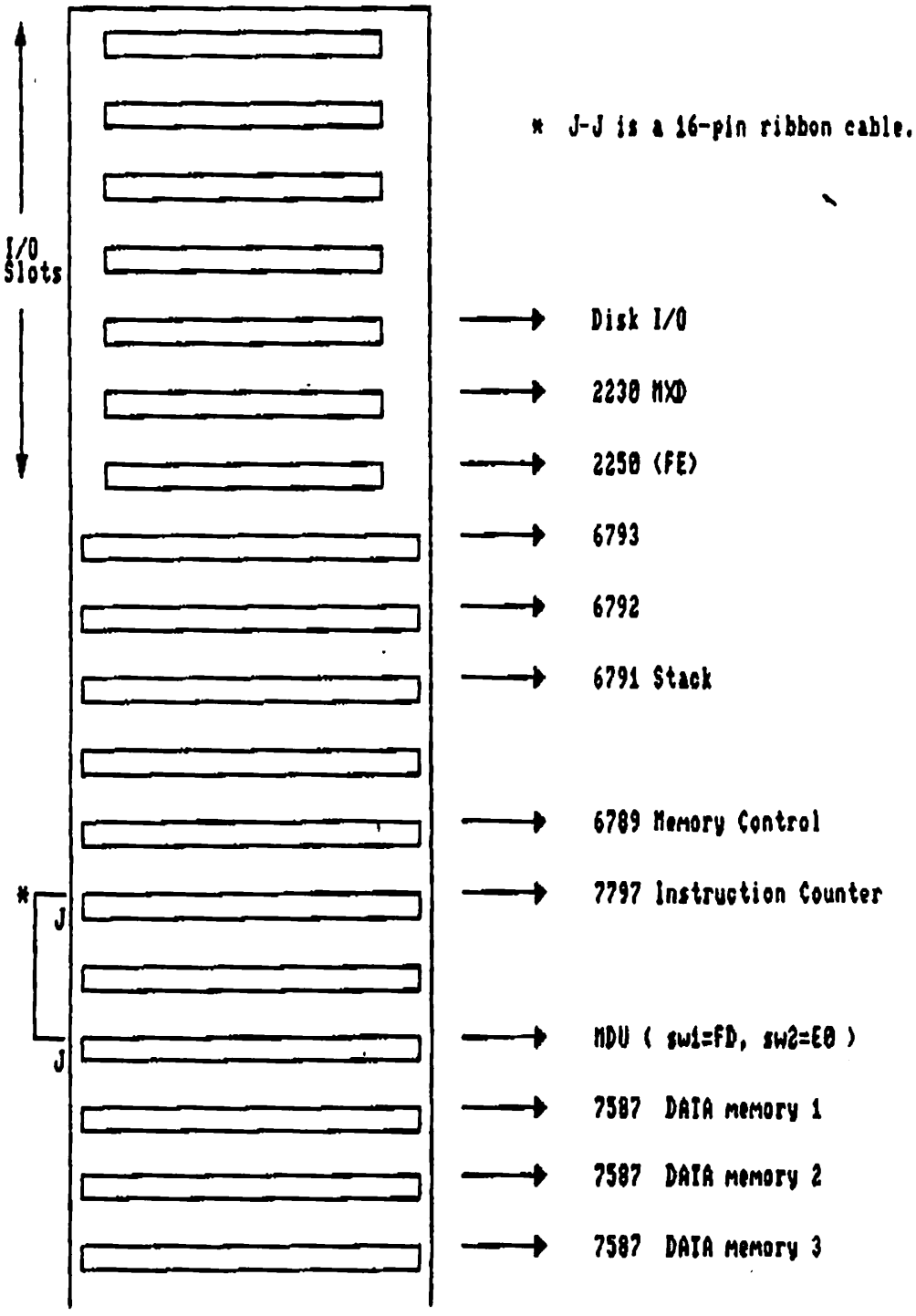

FIG - 3

TARGET system does not boot ,that is, "MOUNT SYSTEM PLATTER" message cannot be seen on TARGET terminal.

The HOST system connections are exactly same as in FIG -2.

How To Boot The 2600 Microcode Development System

A) Boot the HOST system as a normal MVP.

B) Boot the Target system with the file "@MDU" - This is done by typing "@MDU" then pressing the Special Function Key corresponding to the platter containing the file "@MDU". At this point a load message will be displayed and the system will appear to hang.

C) From Partition #1 of the HOST system:
   a) select the platter containing the 2600 Microcode Development System as the default disk, and enter "LOADRUN".
   b) Select and run the program "2600 MDU" from the menu.
   c) Press Special Function Key 15 (SF'15) to halt the TARGET CPU.
   d) Using SF'8, load the Operating System into the TARGET system.
   e) Using SF'22, disable checksums by changing location Hex(000F) to Hex(800000).
   f) Using SF'30, set the Instruction Counter to Hex(0003).
   g) Press SF'31 to begin execution of the Operating System in the TARGET CPU.

   NOTE: at this point the words "2600 Executing..." should appear in the upper left corner of the #1 terminal on the HOST system. If this does not happen, use the following procedure at the #1 terminal on the HOST system:

   1) After following the above steps, press "Shift Reset"
   2) enter "CLEARV"
   3) enter "RUN"
   4) use SF'30 to set the Instrucion Counter to Hex(0003)
   5) press SF'31

D) From partition #1 of the TARGET system: now follow the normal power-up sequence to configure the system.

Order of Boards in the CPU of the TARGET
System of the 2600 Microcode Development System

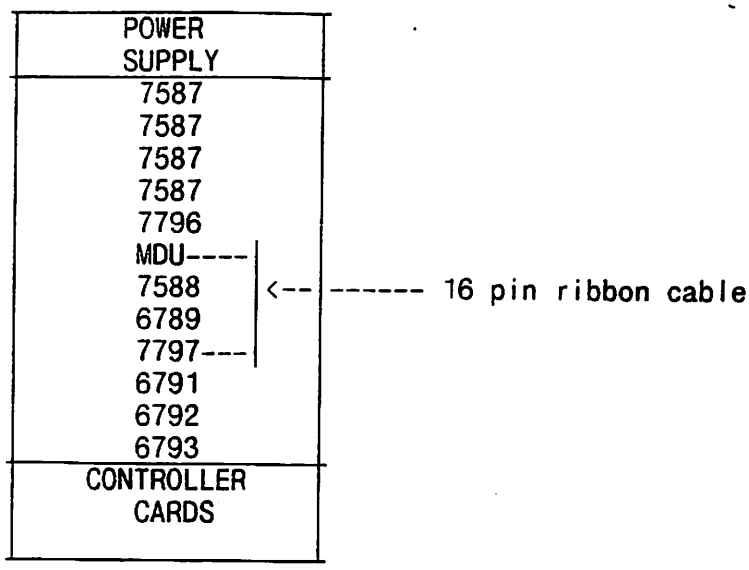

Datamatics Limited

Unit No. 38,39, SDF II, SEEPZ, Andheri (E), Bombay-400 096. India.
Tel : (91) (22) 6320511, 6324235-6 7. Telex : 011-79064 DCSP IN Fax : +91 (22) 6366368

FACSIMILE CORRESPONDENCE

NO. OF PAGES : 4

TO : MR. RICHARD RILEY, U.S. [illegible]

WANG [illegible], BOSTON, U.S.A.

FAX NO: [illegible]

FROM : [illegible]

[illegible]

[illegible]

[

DATAMATICS

2) GENERATING BOOTABLE MICROCODE:

PLEASE REFER TO OUR FAX DTD. 27TH NOVEMBER, 1990. WE GENERATED AN OBJECT FILE BY ASSEMBLING THE SOURCE CODE FOR BASIC 4. THE GENERATED OBJECT FILE DIFFERS IN SIZE WHEN COMPARED TO "SMVT" BOOTABLE FILE EXISTING ON THE SYSTEM.

WE WOULD LIKE TO KNOW THE PROCEDURE TO CONVERT THE OBJECT CODE GENERATED BY THE BASIC ASSEMBLER TO A BOOTABLE MICROCODE FILE.

WE WOULD VERY MUCH APPRECIATE AN IMMEDIATE RESPONSE FROM YOU IN THIS REGARD.

REGARDS,

(S. SAMPATHKUMAR)

SET-UP I

Host I/O configuration I

OUR SYS

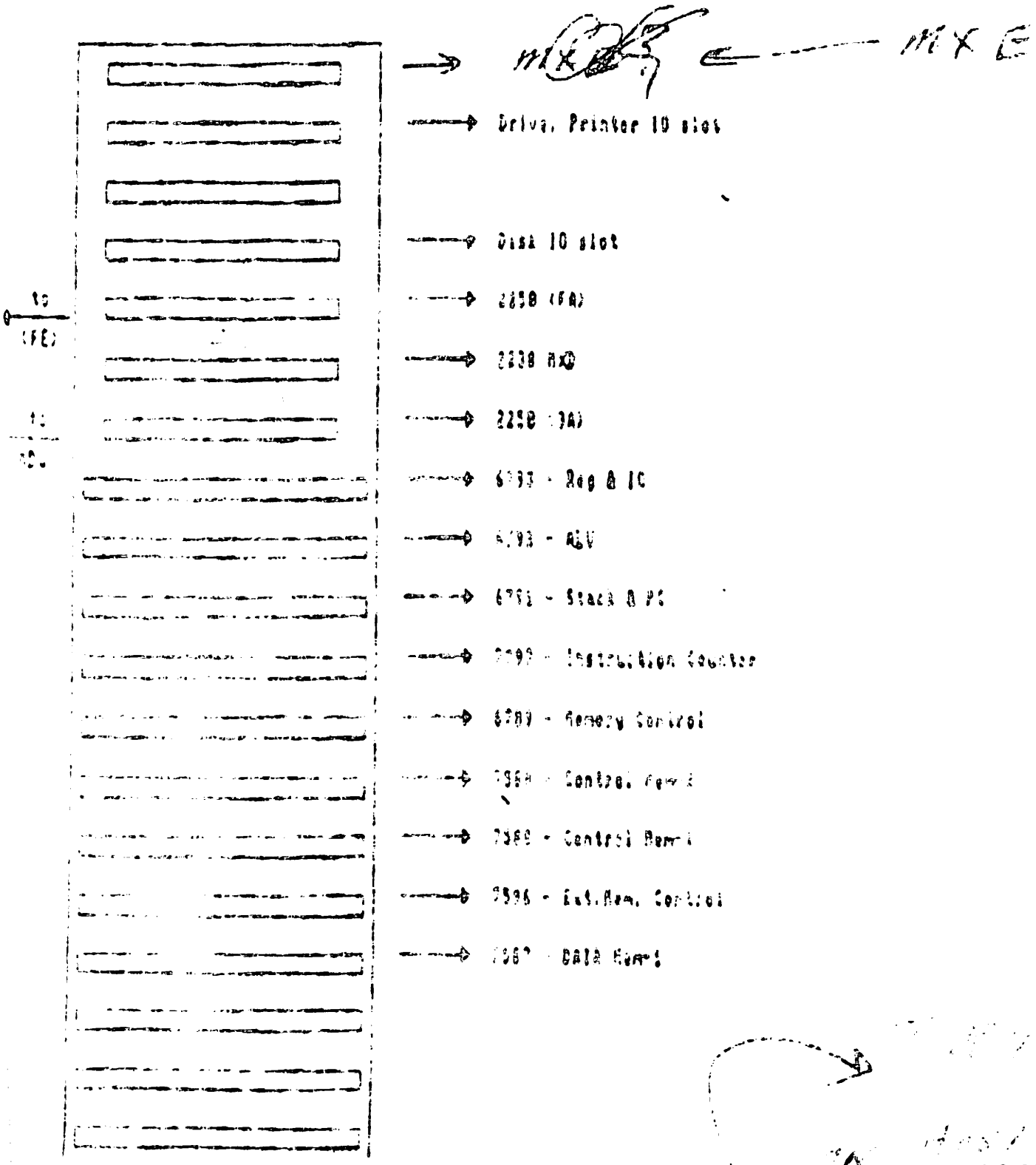

FIG - 2

System [illegible] and when program [illegible] is [illegible], it displays [illegible] Execution [illegible] but gives no response to [illegible].

Return + SF [illegible]

SET-UP I

MDU : TARGET

Setting of Boards within TARGET system :

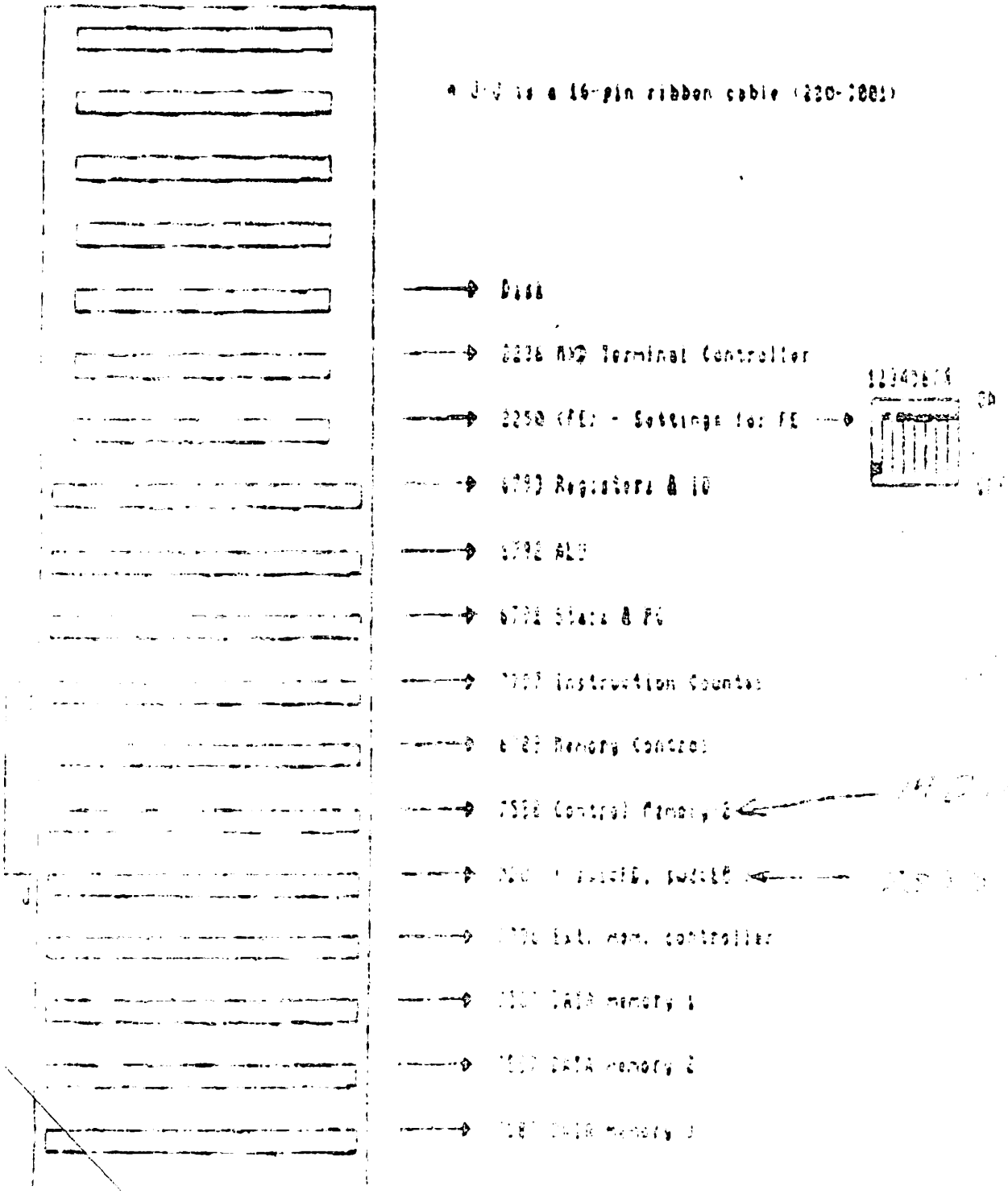

FIG - 1

For this setup TARGET system boots with [illegible] file and displays message "MDU UTILITY 07/13/1981" and appears to hang.

TO: Bill Hsien

FROM: Michael Riley

DATE: Jan. 15 1991

SUBJ: Change Datamatics Contract

The contract that Datamatics has for fixing P1 bugs in the VLSI BASIC-2 O.S. is not proceeding smoothly. We starter this contract in July of 1990 and the time we got all the hardware and software to India it was late September. We can not get the hardware to work with the software and for the last two months we have tried several approaches to solve this problem. I have a working VLSI debug system in my lab that can be used to fix these P1 Bugs. I want to cancel the current contract (W279291) with Datamatics and make a new one with Datamatics to have one of their engineers to come to Wang and fix the VLSI BASIC-2 O.S. bugs. The current contract has about $3000.00 in it and the new Contract will cost about $7700.00. This is the only way we are going to get these P1 bugs fixed.

cc Gene Schulz

Mahendra D. Shirali

Datamatics Ltd.
Exports Division
Unit No. 39, SDF II, SEEPZ, Andheri (E), Bombay-400 096, INDIA
Tlx: 011-79064 'DCSP IN' ● Fax: + 91 (22) 6366368
Tel: + 91 (22) 6320511/6324235/36/37

Mahendra D Shirali

1990 Imperial Gardens
Apt.#2, Middlesex Street
Lowell
M A 01851.

Tel:(R)508-441-0978
(O)508-967-6622

15 July 1991

Datamatics Limited has deputed me as their representative at Wang Laboratories in the capacity of their Resident Manager.

I will be glad to provide necessary inputs and direction to the success and stability of your project and to ensure the continued co-operation provided to you by our consultants at Wang.

If you have any queries, please feel free to give me a call.

Regards,

M. D. Shirali

Mahendra D Shirali

x76622

To: Mr. Michael Riley (M/S 014-690)

CC: Mr. Bill Hsien

From: S. Ramakrishnan

Date: 8 Oct., 1990

Sub: Status of 2258 L.C.O maintenance

---

1. Accomplishment during last week: I investigated the following problems:

(a) 32nd VDISK fails to close: When an attempt is made to close 32nd VDISK through either "Detach DMS/VDISKs" or "Change VDISK Configuration", the system returns an error code (X'09/0082 in V7$) indicating "file server error/file not open". 2200 Server (2200SRV) receives the file handle for 32nd VDISK incorrectly (byte swapped) from 2258, even though 2200 passes the file handle in the correct format. 2258 (microcode) does not seem to process the file handle for the 32nd VDISK correctly. (Z80 stores two bytes of a word in the reverse order.)

(b) Shared mode support: Even though VS opens VDISKs (files) in shared mode, 2258 returns an error code, "unsupported file attribute", when 2200 tries to update 2258 by using "Add VDISK" micro-command. 2258 (microcode) fails to recognise "shared" mode.

(c) 2200 Server (2200SRV) version 01.60.00: I tested the new release of the 2200 server using TESTCON1 (consecutive), TESTIDX1 (indexed) and TESTREL1 (relative) sample programs. TESTIDX1 and TESTREL1 were executed successfully whereas TESTCON1 failed while attempting "consecutive lock"; the system returned an error code (X'09/000A in V7$), indicating "file server error/invalid parameters".

2. Plan for the current week: I plan to debug and fix PTRs #P10F227710 and P30F301769. I also plan to start documentation.

3. Resource: VS access was lost for one day, on Monday, 2nd Oct., '90, since the VS system was IPLed with a new configuration not supporting 2258.

4. Software test environment:

VS/OS Version:	07.30.02
VS/2200 Server Version:	01.00.14
BASIC - 2 OS Version:	03.03.06
2200/VS Services Version:	1.A

Status of 2258 LCO maintenance

8 Oct., 1990

S.No.	Bug No.	Status	Estimated date of completion	Remarks
1.	P200006911	Duplicated	Documentation error; may be VS/2200 Server error?	Please refer to Documentation Note 1.
2.	P40F403145	Closed	-	Please refer to Documentation Note 2.
3.	P50F502664	Closed	-	Can not be duplicated! Returns correct error code for invalid combinations of Volume/Library/File. Please refer to Documentation Note 3.
4.	P50F502732	Closed	Operator error	Works as documented (or designed?); please refer to Documentation Note 4.
5.	P10F226684	Open	19 Oct., 1990	
6.	P10F227696	closed	-	32 VDISKs can be opened; but 32nd VDISK can not be closed. Please refer to the cover page.
7.	P10F227710	Duplicated	12 Oct., 1990	Can write in some protected numeric fields and beyond!
8.	P200006910	Open	19 Oct., 1990	

S.No.	Bug No.	Status	Estimated date of completion	Remarks
9.	P30F301769	Duplicated	12 Oct., 1990	Subroutines '109 and '110 return key mask in V4$ as "534D"
10.	P50F501407	Closed	-	Can not be duplicated
11.	P50F501474	Duplicated	Documentation error	File designator #3 is used by subroutine '199. Please refer to Documentation Note 5.
12.	P50F501716	Closed	-	Can not be duplicated

Documentation Note:

1. The parameter, "V6 = Time out for hold (in seconds)", listed in the header of "VSACESS0", does not appear in the 2200/VS Local Communication Option Programmer's Reference Guide (Table 3-3, Page 3-7).

The header for file attributes, V9$() returned by General Open ('101) and Get File Attributes ('203) subroutines are different:

General Open - Header:
- 2 bytes of data count
- 62 bytes of attribute data
  - 1 byte Block header (X'01)
  - 2 bytes of count
  - Attribute data

Get File Attributes - Header
- 1 byte of word count (X'00)
- 2 bytes of byte count
- 62 bytes of attribute data
  - 1 byte Block header (X'01)
  - Attribute data

The code for file organization returned by both the subroutines for alternate indexed file is "A"(X'41); this is a valid code for alternate indexed file (refer to "RO Pack Reference Manual") not mentioned in the 2200/VS Local Communication Option Programmer's Reference Guide.

The subroutines do not seem to return correct attribute data fields for alternate keys. (May be VS/2200 Server error?)

2. This problem could not be reproduced as reported earlier. I was able to create successfully consecutive, indexed and relative files with number of records exceeding 20,000.

3. The return code, "V0$ = A5 (Error in SMB block)", is not listed in the Appendix A (Table A-1, Page A-2) of the 2200/VS Local Communication Option Programmer's Reference Guide .

Since the error codes returned by 2258 L.C.O subsystem are in hexadecimal, I suggest that the error codes be listed in hexadecimal in the 2200/VS Local Communication Option Programmer's Reference Guide.

4. Even though the return code, V0$ is X'FF, V7$ indicates SMB errors, file server error X'09 and an invalid key value X'17. The user should check V7$ evev if return code in V0$ is X'FF as per 2200/VS Local Communication Option Programmer's Reference Guide (Table A-1, Page A-2). The samples programs, TESTCON1, TESTIDX1 and TESTREL1 are also coded in the same way.

I suggest that return code, V0$ should be X'A5 in this case.

5. The 2258 interface subroutine '199 and the file designator #3 used by the subroutine '199 are not mentioned in the 2200/VS Local Communication Option Programmer's Reference Guide; but the calling routine is expected to "SELECT #3/(Platter Address)"!

Datamatics Ltd.

Unit No. 38/39 SDF II, SEEPZ
Andheri (E) Bombay-400 096. INDIA
Tel: +91 (22) 6320511 ● 6324235
6324236 ● 6324237
Telex: 011-79064 'DCSP IN'
Fax: +91 (22) 6366368

FASCIMILE CORRESPONDENCE

TO : MR MICHEAL RILEY, (M/S 014 69B)
WANG LABS. INC., LOWELL, U.S.A.
FAX NO. 508 967 3213.

CC : MR MAHENDRA SHIRALI, M/S 013 790
MS TERRI INCA, M/S 014 A3B

FROM : MR S. RAMAKRISHNAN, DATAMATICS LIMITED,
BOMBAY, INDIA.

DATE : JULY 22, 1991

SUB : BASIC-2 RELEASE 3.5

REF : YOUR PURCHASE ORDER NO. U4 W279291
AND OUR FAX DATED JULY 15, 1991

WE HAVE INVESTIGATED AND FIXED THE PROBLEMS RELATING TO BACKGROUND PRINTING ON LOCAL PRINTER, LIMITS, MOVE, LIST DCT AND LOAD DCT. IN THIS RELEASE OF BASIC VERSION 3.5. THE SHIPMENT INCLUDES THE FOLLOWING ITEMS:

1. A DISK PLATTER CONTAINING LATEST SOURCE MODULES, OBJECT MODULES AND BOOTABLE OBJECT MODULE OF BASIC-2 RELEASE 3.5. AN 8 INCH HARD SECTORED DISKETTE CONTAINING MODIFIED SOURCE MODULES AS WELL AS BOOTABLE OBJECT MODULE OF BASIC-2 RELEASE 3.5.

2. A DOCUMENTATION ON BASIC-2 RELEASE 3.5 REFLECTING THE CHANGES MADE TO THE SOURCE MODULES.

3. QUALITY ASSURANCE REPORT (TEST REPORT) ON BASIC-2 RELEASE 3.5.

4. A NOTE ON MVP BASIC-2 RELEASE 3.5.

PLEASE ACKNOWLEDGE THE RECEIPT OF THE SHIPMENT.

WARM REGARDS

S. RAMAKRISHNAN
DIVISIONAL MANAGER

Regd. Office :
Eucharistic Congress Building III
5 Convent Street, Bombay-400 039.

A NOTE ON MVP BASIC-2 OS RELEASE 3.5

1. ENVIRONMENT FOR BUG FIXING :

   a) **Hardware** : 2600 Micro-code Development System.

   b) **Operating System** : Basic-2

   c) **Input Source Code** : Basic-2 O.S Release 3.4

   d) **Assembler** : 2600 Assembler

   e) **Editor** : 2600 Assembly Language Editor.

2.

(i) The Release floppy (8") contains the following files :

   a) **@MVP** : It is the final bootable program (Release 3.5).

   b) Assembly language files whose code has been modified to fix the bugs. They are
      > **DBMVP55A**
      > **BPMVP27E**
      > **BPMVP43**
      > **BPMVP43B**
      > **BPMVP41**
      > **BPMVP41M**

   c) **BPMVP8D2** : To show the new Release 3.5 in PSTAT command output.

   d) **@GENPART , @SYSFILE** : To configure the system on booting.

(ii) The Disk Platter containing modified as well as non-modified files.

(iii) A Verify list of all the files on the Disk Platter.

(iv) Documentation on Basic-2 Release 3.5 .

(v) Quality Assurance Report (TEST RESULTS) of bugs fixed.

3. INSTALLATION PROCEDURE :

a) Insert the floppy in 8"drive and power-on the machine.

b) Press RESET key and type @MVP.

c) Press the SF key corresponding to the drive containing the @MVP file.

4. Probes Investigated and fixed in Basic-2 O.S Release 3.5

a) BACKGROUND PRINTING ON LOCAL PRINTER :

Probe : All background printing was taking place on the same line.

Fix : Background printing is fine (line by line).

b) LIST DT Command in background :

Probe : Local printer driver was not listed in LIST DT command output for background printing.

Fix : It is now listed (and hence accessible in background).

c) LIMITS Command :

Probe : The LIMITS command returned a file status of
+2 for active CS-386 program file &
-2 for scratched CS-386 program file.

Fix : It now returns a file status of
+1 for active CS-386 program file &
-1 for scratched CS-386 program file.

d) MOVE T/Dxx, TO T/Dyy, Command :

Probe : With MOVE command, CS-386 format (active) program files were dropped and not copied to destination disk.

Fix : CS-386 active program files are also copied.

e) LIST DC T command :

Probe : LIST DC T command printed ? in file type column for CS-386 program files.

Fix : Prints P' in file type column for CS-386 program files.

f) LOAD DC T Command :

Probe : Gives error D82 : File Not Found when LOAD DC T command is issued.

Fix : The above Error does not occur now.

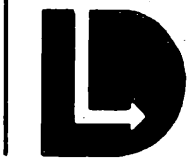

INDEX SECTORS = 00250
END CAT. AREA = 52000
CURRENT END = 50426

NAME	TYPE	START	END	USED	FREE
JLMVP32L	D	18107	18153	00045	00002
BPMVP9D$	D	18499	18529	00005	00026
RSPACK8	P	22446	22472	00015	00012
@MXE0	D	22473	22673	00072	00129
BPMVP33Y	D	22763	22812	00020	00030
BPTEST$	D	23629	23659	00005	00026
EDIT.2	P	35642	35664	00023	00000
BPEDTDEF	D	39816	39818	00003	00000
@NEWOS	D	39140	39809	00420	00250
JSPTCH1&	D	00859	00916	00004	00054
BPMVP8D$	D	18468	18498	00012	00019
RSPACK9	P	27503	27530	00015	00013
EDIT.3	P	35665	35758	00094	00000
RKASMDEF	D	43633	43635	00003	00000
RSFORMAT	P	00917	00921	00005	00000
BPTEST&	D	01531	01588	00004	00054
BPOBJCT@	D	03751	04750	00016	00984
BPMVP9D&	D	18654	18711	00013	00045
JSPTCH1$	D	00756	00786	00004	00027
@MOD36	D	03395	03494	00017	00083
BPGIOP	D	05061	05090	00010	00020
BPMVP8B	D	07936	07985	00047	00003
BPMVP8D&	D	18580	18637	00008	00050
BPMVP50	D	24946	24995	00029	00021
EDIT.1	P	35538	35641	00093	00011
MVP3.5@	D	43636	44635	00661	00339
DAMVP20H	D	12866	12915	00032	00018
BPMVP40Y	D	14338	14387	00035	00015
JLMVP32H	D	16103	16190	00040	00048
BPMVP9D	D	18154	18177	00019	00005
BPMVP41X	D	18319	18367	00028	00021
DBMVP55H	D	00787	00808	00015	00007
BPMVP5I	D	01872	01921	00016	00034
BPMVP40X	D	13008	13057	00019	00031
JLMVP32I	D	16664	16713	00034	00016
BPMVP8D	D	17899	17948	00021	00029
BPGIOP&	D	28836	28893	00005	00053
$ON	SP	39813	39815	00003	00000
TBOBJCT@	D	10117	11116	00005	00995
JLMVP32J	D	17610	17659	00030	00020
BPMVP41Z	D	18530	18579	00021	00029
EDIT.4	P	35759	35762	00004	00000
TSTOBJ2	SD	36140	39139	00667	02333
BPMVP40Z	D	14388	14437	00023	00027
JLMVP32K	D	17949	17998	00007	00043
BPGIOP$	D	21616	21646	00004	00027
BPMVP6H	D	34214	34284	00051	00020
JSPTCH1	D	35136	35198	00007	00056
EDIT.5	P	35763	35766	00004	00000
@KGK	SD	41729	42428	00676	00024
@XYZOS	SD	45938	46437	00001	00499
DBMVP55E	D	00471	00504	00022	00012
DAMVP26B	D	01791	01840	00038	00012
JLMVP30F	D	06326	06375	00034	00016

DAMVP27C	D	06596	06645	00020	00030
BPMVP2C	D	09912	09961	00039	00011
DAMVP20D	D	11828	11877	00022	00028
BPMVP5D	D	16249	16353	00091	00014
BPJUNK	D	16714	16736	00005	00018
JUNKBP	D	17110	17609	00001	00499
DAMVP21E	D	17691	17740	00030	00020
BPMVP7F	D	22307	22356	00035	00015
BPMVP6G	D	26209	26258	00015	00035
DBMVP55D	D	00339	00412	00051	00023
DAMVP26C	D	01953	02002	00039	00011
JSOBJCT@	D	05270	05769	00008	00492
BPMVP2B	D	05975	06024	00041	00009
DAMVP27B	D	06457	06506	00009	00041
JLMVP30G	D	06646	06695	00028	00022
BPMVP10Q	D	09062	09111	00015	00035
DAMVP20E	D	12263	12312	00016	00034
DBMVP41A	D	16737	16773	00034	00003
DAMVP21D	D	16774	16823	00045	00005
BPMVP6F	D	22137	22186	00031	00019
DAMVP35A	D	32534	32583	00024	00026
DBMVP55G	D	00729	00755	00003	00024
BPMVP1B	D	05770	05835	00051	00015
DAMVP27A	D	06025	06074	00029	00021
BPMVP0C	D	08912	08961	00031	00019
BREDSH	P	11731	11738	00003	00005
DAMVP20F	D	12452	12501	00011	00039
BPMVP7D	D	17741	17790	00043	00007
DAMVP21G	D	18236	18285	00020	00030
BPMVP6E	D	20317	20366	00022	00028
DAMVP35B	D	33488	33537	00027	00023
.STARTD	D	35817	35821	00003	00002
@DCL	SD	48522	49221	00666	00034
DBMVP55F	D	00669	00728	00037	00023
DAMVP26A	D	01357	01406	00042	00008
DAMVP28$	D	02177	02207	00005	00026
RSPACK9A	P	03147	03164	00018	00000
BPMVP0B	D	05141	05190	00017	00033
JLMVP30E	D	06075	06124	00046	00004
BPMVP1C	D	09112	09161	00039	00011
TOWK.TMP	D	12132	12231	00002	00098
DAMVP20G	D	12618	12667	00023	00027
MVP@	D	13058	13757	00344	00356
BPMVP6D	D	16824	16906	00082	00001
DAMVP21F	D	17999	18048	00027	00023
@MVP	SD	19304	19648	00345	00000
BPMVP7E	D	21056	21105	00046	00004
START	P	29396	29400	00003	00002
KGMVP43	D	47091	47150	00001	00059
RSPACK8A	P	00591	00610	00020	00000
JLMVP30B	D	04801	04850	00021	00029
BPMVP7B	D	07728	07777	00023	00027
JSOBJ2@	D	08962	09061	00099	00001
BPMVP6C	D	11878	11927	00010	00040
BPMVP1D	D	15132	15194	00055	00008
DAMVP21A	D	15652	15701	00020	00030
CNRETRY$	D	16512	16542	00004	00027
BPMVP0E	D	18870	18941	00052	00020
DAMVP22B	D	19833	19882	00029	00021
BPRED	D	22871	22894	00004	00020

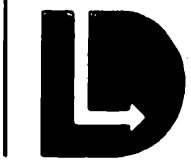

BPJUNK$	D	34285	34315	00004	00027
DBMVP55A	D	35027	35085	00037	00022
DAMVP35D	D	35086	35135	00017	00033
22KGK&	D	43075	43132	00003	00055
RKWK.TMP	D	01589	01688	00025	00075
DAMVP28&	D	02704	02761	00005	00053
JSWK.TMP	D	02989	03088	00012	00088
BPMVP6B	D	07235	07284	00025	00025
JSOBJ3@	D	09162	09661	00022	00478
DAMVP20A	D	11191	11240	00020	00030
BPMVP7C	D	12313	12362	00040	00010
JLMVP32A	D	14496	14572	00075	00002
BPMVP0D	D	14980	15029	00037	00013
BPMVP1E	D	18942	18991	00021	00029
CNIFDO$	D	21390	21420	00004	00027
BPMVP15P	D	29401	29450	00031	00019
DAMVP35E	D	35257	35306	00037	00013
JUNKXXX	D	02503	02602	00001	00099
DAMVP26D	D	02208	02257	00036	00014
BPMVP5B	D	06977	07026	00022	00028
BPJUNK&	D	07778	07835	00003	00055
MLMVP9O	D	11241	11312	00066	00006
DAMVP20B	D	11394	11443	00035	00015
BPMVP0OW	D	11928	11998	00049	00022
JLMVP32B	D	14731	14780	00011	00039
DAMVP21C	D	16354	16403	00023	00027
CNRETRY&	D	17841	17898	00004	00054
BPMVP2E	D	19042	19091	00009	00041
BPMVP1F	D	21697	21746	00038	00012
BPMVP15S	D	31758	31807	00033	00017
DBMVP55C	D	35432	35493	00048	00014
22KGK$	D	43044	43074	00004	00027
DAMVP28	D	01236	01285	00035	00015
DAMVP26E	D	02422	02471	00009	00041
JLMVP30A	D	03670	03719	00042	00008
BPMVP4B	D	06696	06768	00054	00019
DAMVP27D	D	07027	07076	00019	00031
DAMVP20C	D	11581	11630	00026	00024
BPMVP5C	D	11631	11680	00020	00030
BPMVP2D	D	15326	15375	00038	00012
DAMVP21B	D	15928	15977	00032	00018
DAMVP22A	D	19649	19698	00020	00030
DAMOD98&	D	20367	20424	00004	00054
RSPACK7	P	21263	21302	00030	00010
CNIFDO&	D	27664	27721	00004	00054
BPMVP15R	D	30909	31012	00086	00018
DBMVP55B	D	35307	35354	00026	00022
22KKSGP	D	43133	43632	00001	00499
BPMVP0Y	D	01070	01185	00109	00007
BPMVP91A	D	12668	12726	00039	00020
MLMVP9O&	D	12727	12784	00006	00052
BPMVP41L	D	14781	14830	00032	00018
DAMOD99&	D	22187	22244	00009	00049
BPRED$	D	23685	23715	00007	00024
BPMVP15M	D	27930	27979	00036	00014
#WORK013	D	30240	30741	00002	00500
LOGON	D	32584	32586	00003	00000
#WORK020	D	44736	45237	00001	00501
TEST&	D	50280	50337	00003	00055
BPFILE#&	D	00505	00562	00007	00051

BPMVP50M	D	09662	09711	00040	00010
CNSTOP$	D	12835	12865	00004	00027
DAMVP27Z	D	13758	13837	00028	00052
BPMVP41M	D	15030	15100	00064	00007
CNSELP0&	D	15526	15583	00004	00054
JSMVP42E	D	18286	18318	00023	00010
DAMOD98$	D	19883	19913	00004	00027
#WORK003	D	23024	23525	00002	00500
#WORK012	D	29612	30113	00002	00500
BPMVP0X	D	30114	30189	00060	00016
DAMVP35Z	D	03314	03363	00026	00024
BPMVP50N	D	09962	10011	00013	00037
MLMVP90$	D	12363	12393	00005	00026
DAMVP27Y	D	12916	12965	00041	00009
BPMVP41N	D	15195	15244	00026	00024
DAMOD99$	D	21959	21989	00010	00021
BPRED&	D	24888	24945	00005	00053
D21	P	26147	26150	00003	00001
BPMVP150	D	28759	28808	00023	00027
#WORK011	D	28894	29395	00502	00000
22KGK	D	42529	42541	00005	00008
TEST$	D	50249	50279	00004	00027
BPMVP15N	D	28061	28110	00034	00016
#WORK010	D	28121	28622	00002	00500
DBPATCH	D	29451	29530	00009	00071
CNGIO$	D	31144	31174	00003	00028
JLMVP30&	D	32587	32644	00008	00050
BPFILE#$	D	35494	35524	00006	00025
@PQR	SD	46773	47090	00001	00317
RSPACKA1	P	00563	00590	00013	00015
DAMVP20$	D	02472	02502	00014	00017
BPMVP0Z	D	05191	05269	00031	00048
JLMVP32$	D	05836	05866	00015	00016
BPMVP1AA	D	10012	10066	00036	00019
DAMVP22&	D	12502	12559	00006	00052
DAMVP27X	D	12785	12834	00012	00038
BPMVP91B	D	12966	13007	00026	00016
@RED	D	13838	14337	00343	00157
JSVCD00	D	14831	14929	00062	00037
CNSELP0$	D	15101	15131	00004	00027
BPMVP410	D	15376	15425	00021	00029
REDSH	P	18812	18819	00003	00005
DAMVP24	D	19092	19141	00031	00019
CNSTOP&	D	21303	21360	00004	00054
DAMVP35	D	21878	21927	00042	00008
BPWK.TMP	D	44636	44735	00026	00074
DAMVP21$	D	07285	07315	00009	00022
CNA01$	D	08244	08274	00003	00028
DAMVP23&	D	18049	18106	00005	00053
JSVCD01	D	18762	18811	00025	00025
DATE	D	21452	21454	00003	00000
DBMVP55$	D	22732	22762	00014	00017
#WORK006	D	25085	25586	00502	00000
JSMENU8&	D	27606	27663	00006	00052
#WORK017	D	33650	34151	00002	00500
TSTOBJ	SD	35840	36139	00299	00001
22MVPOK&	D	40671	40728	00003	00055
@SST	SD	47751	48450	00666	00034
SPMVP01	D	50222	50248	00011	00016
BPMVP5Y	D	02258	02307	00039	00011

DAMVP20&	D	02762	02819	00005	00053
SSMVP98	D	03165	03313	00125	00024
JLMVP32&	D	06507	06564	00017	00041
DAMVP22$	D	11999	12029	00006	00025
BPMVP1CA	D	19142	19191	00023	00027
JSVCD02	D	21563	21615	00008	00045
DAMVP26	D	23747	23796	00026	00024
#WORK007	D	25645	26146	00002	00500
CNLDCW$	D	29581	29611	00004	00027
JLMVP30$	D	31013	31043	00012	00019
CNGIO&	D	32812	32869	00004	00054
#WORK016	D	32870	33371	00502	00000
NEWBP41	D	01720	01790	00054	00017
RDMVP30H	D	04851	04913	00044	00019
BPMVP5Z	D	07077	07126	00048	00002
DAMVP21&	D	08086	08143	00007	00051
CNA01&	D	08665	08722	00004	00054
DBOBJCT@	D	09712	09811	00071	00029
BPMVP2AA	D	11313	11362	00017	00033
DAMVP23$	D	16907	16937	00006	00025
22MVP	D	18638	18650	00013	00000
DBMVP55&	D	22813	22870	00004	00054
#WORK004	D	23797	24298	00002	00500
JSMENU8$	D	27472	27502	00005	00026
SGASM	D	30742	30827	00004	00082
DAMVP27	D	31044	31093	00044	00006
#WORK015	D	31962	32463	00002	00500
I/P	P	39810	39812	00003	00000
22MVPOK$	D	40640	40670	00004	00027
DAMVP20	D	01407	01456	00032	00018
JLMVP32	D	03495	03549	00035	00020
CNLDCW&	D	05003	05060	00005	00053
SSMVP98&	D	05867	05924	00008	00050
BPMVP41K	D	14573	14622	00032	00018
JSVCD00$	D	15752	15782	00006	00025
DAMVP24$	D	20425	20455	00004	00027
BPMVP8D2	D	21361	21389	00024	00005
DAMVP35$	D	22357	22387	00011	00020
#WORK005	D	24386	24887	00002	00500
DAMVP26&	D	27356	27413	00010	00048
#WORK014	D	31175	31676	00002	00500
DBPATCH$	D	32645	32675	00004	00027
@KG	SD	45238	45937	00343	00357
SGASM&	D	35199	35256	00003	00055
DAMVP27&	D	35355	35412	00015	00043
TESTOS2	SD	39852	40551	00001	00699
@XXX	SD	49222	49721	00420	00080
SPMVP01$	D	50338	50368	00004	00027
DAMVP21	D	06125	06174	00004	00046
BPMVP50D	D	08144	08193	00030	00020
BPMVP40E	D	08194	08243	00039	00011
TBWK.TMP	D	08491	08590	00026	00074
BPMVP11A	D	09812	09861	00032	00018
BPMVP4AA	D	11681	11730	00035	00015
BPMVP12B	D	15426	15475	00038	00012
BPREDSHB	D	16064	16102	00019	00020
tbWK.TMP	D	18368	18467	00002	00098
BPMVP33A	D	19699	19770	00050	00022
JSVCD01$	D	19771	19801	00004	00027
22MVP&	D	19914	19971	00003	00055

JSWORK	D	20556	21055	00422	00078
DBMVP55	D	22245	22289	00025	00020
JUNK75	D	27722	27821	00026	00074
SGY	D	28623	28708	00003	00083
DBPATCH&	D	34316	34373	00005	00053
.START	P	35803	35806	00004	00000
BPMVP27E	D	02308	02363	00042	00014
SSMVP98$	D	04914	04944	00009	00022
BPMVP10A	D	05925	05974	00040	00010
BPMVP40D	D	07836	07885	00037	00013
BPMVP50E	D	08391	08440	00029	00021
DAMVP22	D	10067	10116	00028	00022
BPMVP12C	D	15702	15751	00026	00024
JSVCD00&	D	16454	16511	00005	00053
BPREDSHC	D	16543	16605	00043	00020
BPMVP13B	D	19192	19241	00037	00013
DAMVP24&	D	21156	21213	00004	00054
928+R$	D	22290	22306	00016	00001
DAMVP35&	D	22674	22731	00012	00046
DAMVP26$	D	26259	26289	00015	00016
RSPACK7A	P	27562	27605	00034	00010
JLMVP30	D	28111	28120	00005	00005
BPMVP27F	D	02603	02641	00033	00006
BPMVP10B	D	06175	06224	00018	00032
BPMVP40G	D	08591	08664	00054	00020
DAMVP23	D	15476	15525	00029	00021
BPMVP13A	D	18992	19041	00040	00010
22MVP$	D	19242	19272	00004	00027
JSVCD01&	D	20201	20258	00003	00055
DBWATCH	D	23526	23578	00015	00038
#WORK008	D	26321	26822	00001	00501
BPMVP6EE	D	27822	27871	00031	00019
SGASM$	D	34152	34182	00004	00027
DAMVP27$	D	34374	34404	00015	00016
22MVP0K	D	39819	39851	00013	00020
#WORK019	D	42542	43043	00001	00501
SPMVP01&	D	50369	50426	00003	00055
BPMVP09	D	00809	00858	00041	00009
BPMVP49$	D	02642	02672	00005	00026
BPSAV&	D	04945	05002	00005	00053
BPMVP40F	D	08441	08490	00039	00011
BPMVP12A	D	15245	15294	00042	00008
BPREDSHA	D	15841	15896	00038	00018
BPMVP42D	D	17791	17840	00027	00023
BPMVP33B	D	19972	20021	00041	00009
#WORK009	D	26854	27355	00002	00500
BPMVP18	D	29531	29580	00039	00011
#WORK018	D	34494	34995	00002	00500
@XYZ	SD	46438	46772	00019	00316
@123	SD	47151	47750	00599	00001
START1	P	35831	35839	00009	00000
BPMVP19	D	00970	01019	00025	00025
BPMVP91	D	02820	02872	00035	00018
DAMDUA$	D	03581	03611	00004	00027
BPMVP40A	D	06769	06818	00048	00002
BPMVP5A1	D	07316	07365	00028	00022
BPMVP42C	D	16938	17009	00057	00015
BPMVP43B	D	20130	20200	00056	00015
BPMVP33E	D	21106	21155	00036	00014
DBGPD$	D	21421	21451	00005	00026

BPMVP15A	D	23579	23628	00029	00021
DBRESAV$	D	26823	26853	00004	00027
JSPATCH&	D	27414	27471	00004	00054
JSMENU0&	D	27872	27929	00003	00055
BPMVP08	D	28809	28835	00025	00002
BPMVP16B	D	31094	31143	00012	00038
EDIT	P	35525	35537	00013	00000
BPMVP17B	D	01286	01356	00063	00008
BPMVP49&	D	02873	02930	00005	00053
RDMVP30C	D	03089	03146	00020	00038
BPSAV$	D	03550	03580	00004	00027
BPMVP50A	D	07127	07176	00029	00021
BPMVP41A	D	11444	11522	00060	00019
DAMDUB&	D	14623	14680	00003	00055
BPMVP42B	D	16404	16453	00041	00009
EDTTRN	D	18651	18653	00003	00000
BPMVP43C	D	20456	20505	00033	00017
BPMVP33D	D	20506	20555	00036	00014
BPMVP14A	D	21747	21796	00023	00027
BPMVP36A	D	31808	31899	00057	00035
BPMVP17A	D	01186	01235	00018	00032
BPMVP60A	D	07366	07415	00032	00018
BPMVP50B	D	07416	07465	00039	00011
BPMVP5R	D	07466	07515	00015	00035
BPMVP40C	D	07516	07565	00022	00028
DAMDUA&	D	14438	14495	00003	00055
BPMVP42A	D	15978	16063	00074	00012
DBGPD&	D	21455	21512	00003	00055
JSPATCH$	D	26290	26320	00004	00027
JSMENU0$	D	27531	27561	00014	00017
BPMVP36B	D	32676	32780	00087	00018
@MENU	P	35767	35802	00036	00000
@MAR	SD	49722	50221	00001	00499
BPMVP09$	D	01457	01487	00005	00026
BPMVP49	D	01488	01530	00042	00001
DAMDUB$	D	03720	03750	00004	00027
BPMVP50C	D	07886	07935	00037	00013
BPMVP41C	D	12030	12058	00022	00007
BPMVP5B1	D	12059	12131	00063	00010
BPMVP43A	D	20022	20071	00041	00009
BPMVP16A	D	30190	30239	00045	00005
BPMVP18$	D	32781	32811	00005	00026
BPMVP36C	D	33538	33591	00039	00015
RSBINVAL	P	35413	35431	00009	00010
3.I	D	41229	41728	00333	00167
BPMVP19$	D	01841	01871	00004	00027
BPMVP91$	D	03364	03394	00010	00021
CNLCOMS&	D	08754	08811	00005	00053
OBGPD	D	21214	21262	00025	00024
BPMVP08$	D	31900	31930	00008	00023
BPMVP09&	D	02003	02060	00005	00053
CNWK.TMP	D	06819	06918	00025	00075
cnWK.TMP	D	17010	17109	00025	00075
JSMVP00$	D	34405	34435	00004	00027
BPMVP18&	D	34436	34493	00006	00052
BPMVP19&	D	02061	02118	00004	00054
BPMVP91&	D	03612	03669	00004	00054
CNLCOMS$	D	08723	08753	00004	00027
JSPATCH	D	24299	24354	00013	00043
BPMVP08&	D	33372	33429	00009	00049

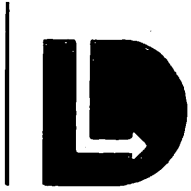

BPMVP01	D	00922	00969	00033	00015
BPMVP41$	D	02673	02703	00016	00015
BPMVP43&	D	12560	12617	00011	00047
BPMVP14$	D	15897	15927	00006	00025
BPMVP05$	D	19273	19303	00020	00011
BPMVP36$	D	22048	22078	00011	00020
BPMVP16&	D	22079	22136	00008	00050
BPPATCH$	D	23716	23746	00004	00027
BPMVP07&	D	25587	25644	00009	00049
BPMVP10	D	28709	28758	00036	00014
CNGPD99&	D	33592	33649	00004	00054
BPMVP50$	D	34996	35026	00011	00020
22XXX	D	40552	40639	00001	00087
BPMVP60&	D	00611	00668	00006	00052
BPMVP11	D	01020	01069	00030	00020
BPMVP42&	D	08333	08390	00015	00043
BPMVP33	D	09862	09911	00019	00031
BPMVP04$	D	15584	15614	00009	00022
BPMVP44	D	15615	15651	00019	00018
BPMVP15$	D	19802	19832	00011	00020
BPMVP06&	D	21990	22047	00010	00048
BPMVP17&	D	26151	26208	00008	00050
BPMVP00	D	27980	28060	00081	00000
BPMVP40$	D	34183	34213	00014	00017
@328	D	40729	41228	00421	00079
BPMVP50&	D	00413	00470	00010	00048
BPMVP41&	D	02931	02988	00011	00047
BPMVP12	D	05091	05140	00028	00022
BPREDSH	D	06225	06325	00084	00017
BPMVP03	D	08812	08861	00034	00016
BPMVP43$	D	12232	12262	00008	00023
BPMVP14&	D	16606	16663	00007	00051
BPMVP05&	D	20072	20129	00013	00045
BPMVP16$	D	21928	21958	00008	00023
BPMVP36&	D	22388	22445	00014	00044
BPMVP07$	D	24355	24385	00014	00017
BPPATCH&	D	24996	25053	00004	00054
CNGPD99$	D	31931	31961	00004	00027
BPMVP60$	D	00250	00280	00005	00026
BPMVP40&	D	00281	00338	00009	00049
BPMVP02	D	04751	04800	00032	00018
BPMVP42$	D	07597	07627	00013	00018
BPMVP13	D	08862	08911	00032	00018
BPMVP04&	D	16191	16248	00011	00047
BPMVP15&	D	20259	20316	00008	00050
BPMVP06$	D	21847	21877	00014	00017
BPMVP17$	D	25054	25084	00013	00018
KKWK.TMP	D	42429	42528	00003	00097
BPMVP01$	D	01689	01719	00016	00015
BPMVP41	D	48451	48521	00056	00015
BPMVP12&	D	07177	07234	00011	00047
BPREDSH&	D	08275	08332	00007	00051
BPMVP03&	D	11523	11580	00008	00050
BPMVP14	D	14930	14979	00029	00021
BPMVP05	D	18712	18761	00006	00044
BPMVP36	D	21797	21846	00033	00017
BPPATCH	D	22895	22923	00006	00023
BPMVP10$	D	31677	31707	00008	00023
BPMVP50	D	31708	31757	00032	00018
BPMVP11$	D	01922	01952	00006	00025

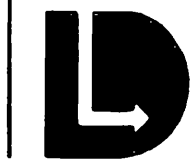

BPMVP02&	D	06919	06976	00006	00052
DBWK.TMP	D	07986	08085	00003	00097
BPMVP33$	D	11739	11769	00011	00020
BPMVP13&	D	11770	11827	00008	00050
BPMVP04	D	14681	14730	00027	00023
DAMDU$	D	15295	15325	00006	00025
BPMVP44$	D	17660	17690	00004	00027
BPMVP15	D	18820	18869	00039	00011
BPMVP00$	D	30828	30858	00031	00000
BPMVP40	D	30859	30908	00029	00021
.2600DEV	P	35822	35830	00009	00000
BPMVP01&	D	02119	02176	00019	00039
BPMVP12$	D	06565	06595	00010	00021
BPREDSH$	D	07566	07596	00007	00024
DAWK.TMP	D	07628	07727	00025	00075
BPMVP03$	D	11117	11147	00005	00026
BPMVP43	D	11148	11190	00042	00001
BPMVP16	D	21647	21696	00040	00010
BPMVP07	D	22924	22973	00038	00012
BPMVP10&	D	33430	33487	00007	00051
BPMVP11&	D	02364	02421	00008	00050
BPMVP02$	D	06376	06406	00012	00019
BPMVP42	D	06407	06456	00035	00015
BPMVP13$	D	11363	11393	00008	00023
BPMVP33&	D	12394	12451	00014	00044
DAMDU&	D	15783	15840	00004	00054
BPMVP44&	D	18178	18235	00005	00053
BPMVP06	D	21513	21562	00039	00011
BPMVP17	D	22974	23023	00030	00020
BPMVP60	D	32464	32475	00006	00006
BPMVP00&	D	32476	32533	00003	00055
tstREDSH	P	23660	23684	00006	00019
.DISKdev	P	35807	35816	00010	00000

WANG 2200 MVP BASIC-2

OPERATING SYSTEM RELEASE 3.5

June 1991.

DATAMATICS LIMITED

Unit No. 39, SDF-II,
SEEPZ, Andheri(East),
Bombay 400 096, India

Description of bugs fixed in MVP BASIC-2 Operating System to update version 3.4 to Version 3.5.

INDEX

CONTENTS	*Pages*
1. BACKGROUND PRINTING ON LOCAL PRINTER	1-4
2. LIMITS	5,6
3. MOVE T/xyy, TO T/xyy,	7,8
4. LIST DC T/xyy	9,10
5. LOAD DC T	11,12

Fix For : **Background Printing On Local Printer.**

Description of the problem :-

Printing from a 'Background' Partition onto a local printer (i.e Terminal Printer port 204), results in an output without linefeeds after the carriage return, despite the printer driver being 'ON'. This problem is absent if the printing is carried out in foreground, other conditions remaining the same.

Cause of the problem :-

1> Starting at memory location 0970 (PTERM) 16 bytes for 16 partitions (one for each partition) are saved to indicate Partition-Terminal relation and partition Release, Waiting, Attachment status as shown below

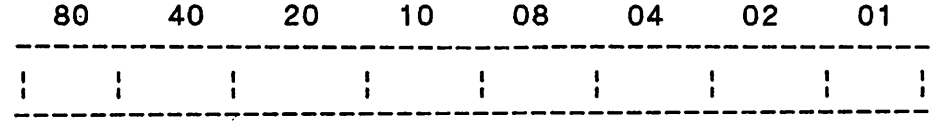

Bits 80,40,04,02 and 01 : Terminal address to which partition is attached.

Bit 20 : Terminal Detached Status (1- YES , 0- NO)
Bit 10 : Partition Waiting Status (1- YES , 0- NO)
Bit 08 : Partition Released Status (1- YES , 0- NO)

For a background partition the Bit 20 of this byte is made '1'.(i.e. terminal is detached from the partition.)

2> Starting at memory location 6646(DRVRDEV) two bytes for each DEVICE DRIVER are saved to indicate :
a> BYTE 1 ==> Terminal Number, Device address, Driver Number
b> BYTE 2 ==> Bit configuration to indicate Driver ON/OFF

Using these two information blocks, decision is taken as to which device driver is 'available' to the current terminal. This checking is done only for LOCAL printer driver and not for SYSTEM printer driver.

The 'PRINT' statement results in a call to GETDRDEV to get the address of the device driver for the print job.

In routine 'GOTCHA' in GETDRDEV, (file 'DBMVP55A'), comparison between registers CH (PTERM Entry) and F3(Address from DRVRDEV Entry) is done to check for matching terminal address (number) and it fails as bit 20 of F3 is always zero while bit 20 of CH is 1 for background partition.

Changes in Code :-

For the above mentioned comparison bits 20, 10, 08, 04 of CH (i.e the bits which are not relevant for terminal address) are masked out.

Routine GOTCHA (File : DBMVP55A) is rewritten as shown on attached copy.

Note : Similar way changes are made in file BPMVP27E to print local driver in background for LIST DT command.

```
280 GOTCHA   TPS                                    TEMP. SAVE DRIVER NUMBER
281          MVI       04,F3
282          BNR       F3,PH,GOTCHA1                BRANCH IF NOT TERM. PRINTER
283          LPI,R     PART#                        SEE IF ITS OUR TERMINAL PRINTER
284          AI        PTERML,CH,PL
285          ANDI,R    0F,K,F3                      GET TERMINAL ADDRESS
286          AI        0FF,F3,F3
287          SHLL      F3,F3,F3
288          ANDI      0C3,F3,F3
289 * ***************************************************************************
290 * Date : 01/09/91.
291 *
292 * Bug : During background printing, all printing takes place on a single line.
293 *
294 * Change in program : following statement added & its next modified.
295 *
296 * Description : The terminal address is extracted from CH
297 *               and saved in PH for comparison.
298 * ***************************************************************************
299
300          ANDI      0C3,CH,PH
301          BER       F3,PH,GOTCHA1                BRANCH IF TERMINAL NUMBERS MATCH
302          MVI       00,F3
303          TSP                                    CLEAN STACK FOR NEXT TRY
304          B         DRDEV1A                      BRANCH TO CHECK NEXT
```

```
LSTDRVRL TPA      ,2                          SAVE ADDRESS OF DRIVER DEVICE LIST ENTRY
         SB       RCM                         READ ENTRY
         BER      F5,PH,LSTDRVRE              BRANCH IF END OF LIST
         BNR      F6,PH,LSTDRVRP              BRANCH IF ADDRESS __ 04

         ANDI     0F,K,F4                     F4 = TERMINAL NUMBER OF ENTRY
         AI       0FF,F4,F4                   CONVERT TERMINAL NUMBER TO...
         SHLL     F4,F4,F4                    TERMINAL ADDRESS
         ANDI     0C3,F4,F4                   F4 = TERMINAL ADDRESS OF ENTRY

* ***************************************************************************
* Date : 01/10/91.
*
* Bug : In LIST DT command, driver for Local printer is not listed.
*
* Change in program : Next statement added.
*
* Description : Terminal address extracted from F7 before comparison.
*
* ***************************************************************************
         ANDI     0C3,F7,F7
         BNR      F4,F7,LSTDRV3A              BRANCH IF not TERMINAL PRINTER OF CURRENT EN
```

Fix For : LIMITS "File Name",A,B,C,D

Where "File Name" is name of CS-386 format program file.

Description Of The Problem :

This statement returns +2 and -2 value in variable D for active program file and scratched program file (It should give +1 and -1 respectively).

Cause of the problem :-

In the catalog index area 16 bytes are reserved to indicate File Status,Type,Name and START, END sector address of file out of which 2nd byte is saved as follows:

```
00 ==> DATA File     ( old and new format )
80 ==> PROGRAM File ( old MVP 2200 format)
40 ==> PROGRAM File ( new CS-386 format  ).
```

In routine LIMITS1 of file BPMVP43B , checks are done on old type program files (2nd byte '80') only.

Change in code :-

An additional check for '40' for the CS386 program files is added to take care of the above problem.

File : BPMVP43B.

```
 77 LIMITS1  SB        GETCHCOM                    LOOK FOR COMMA
 78          BFL       2,SL,LIMITS2                BRANCH IF NOT EXECUTION PHASE
 79          SB        FILE#E                      ENABLE DISK
 80          SB        FINDNAMH                    FIND NAME IN INDEX
 81          BNEH      1,F3,LIMITS3                BRANCH IF NAME NOT IN INDEX
 82          TAP       ,C
 83          TPA+2,R   ,C                          AUXC = ADDRESS OF SOF ADDRESS IN I/O BUFFE
 84          ANDI      1,F3,PH                     PH = 0 IF NOT SCRATCHED, 1 IF SCRATCHED
 85          MVI       1,PL                        PL = 1 IF PROGRAM, 2 IF DATA FILE
 86
 87 * ************************************************************************
 88 * Date : 12/18/90
 89 *
 90 * Bug : LIMITS statement unable to recognize CS-386 program file code.
 91 *
 92 * Change in program : Following statement modified and the next has been inserted
 93 *
 94 * Description : Checks also for CS-386 format program file code(04)
 95 *
 96 * ************************************************************************
 97
 98          BEQH      8,CL,*+3                    2200 TYPE PROG. FILE
 99          BEQH      4,CL,*+2                    CS-386 TYPE PROG. FILE
100          MVI       2,PL
101          TPA       ,A                          SAVE FILE TYPE/STATUS INFO.
102          SB        GTFLPTRS                    AUXB = SOF ADDRESS; AUXD = EOF ADDRESS
103          TAP       ,D
104          TPA       ,F                          AUXF = EOF ADDRESS
105          SB        DREADSF                     READ EOF SECTOR
106          SB        RIOBUFFR                    POINT TO 'IOBUFFER'
107          OR        CL+,,FO
             OR        +,,
109          MV,R      FO,PH
110          MV        CH,PL
111          TPA       ,F                          AUXF = NO. OF SECORS USED
```

Fix For : MOVE T/xyy, TO T/xyy,

Description Of The Problem :-

The MOVE statement ignores program files in CS386 Format. Thus if the source platter contains CS386 format program files, those files are not copied onto the target platter.

Cause of the problem :-

In the catalog index area 16 bytes are reserved to indicate File Status,Type,Name and START, END sector address of file out of which 2nd byte is saved as follows:

00 ==> DATA File (old and new format)
80 ==> PROGRAM File (old MVP 2200 format)
40 ==> PROGRAM File (new CS-386 format)

In routine MOVE3 of file BPMVP43B , checks are done only for file type '00' and '80' for 'active' file and hence neglects new 386 format files.

Change in code :-

An additional check for '40' for the CS386 program files is added to take care of the above problem.

File : BPMVP43B.

```
207
208 MOVE3    SB        NEXTFILE                        GET NEXT FILE FROM INDEX
209          BNEL      0,F0,MVCPYEND                   NF, EXIT
210          BNEL      0,F6,MOVE3                      BRANCH IF FILE SCRATCHED
211
212 * ************************************************************************
213 * Date : 01/14/91
214 *
215 * Bug : On MOVE T/XYZ , T/ABC command, CS-386 program files are not copied ,ie,
216 *                                      they are neglected.
217 *
218 * Change in program : Following statement modified and next has been inserted.
219 *
220 * Description : Check for CS-386 active file also.
221 * ************************************************************************
222          BEQH      8,F7,*+3                        2200 PROGRAM FILE
223          BEQH      4,F7,*+2                        386  PROGRAM FILE
224          BNEH      0,F7,MOVE3                      BRANCH IF FILE TYPE NOT PRGM OR DATA (
225
```

Fix For : LIST DCT/xyy Where xyy is device address.

Description of the problem :-

On execution, the LIST DCT statement prints "?" for CS386 format program files, in place of file type in file listing.

Cause of the problem :-

In routine LISTDC9 of file BPMVP41, other then file types '00' and '80' ("D" for DATA and "P" for old 2200 format PROGRAM) it prints character "?" for file type.

Change in code :-

Modification of code is made in such a way that it will print P' for new CS386 format active and SP' for scratched program file.

File : BPMVP41.

```
277 LISTDC9  SB        TWRITE                          PRINT 'S' IF FILE SCRATCHED
278
279 * ************************************************************************
280 * Date : 01/23/91
281 *
282 * Bug : In LIST DC T command, prints ? for CS-386 program file type.
283 *
284 * Change in Program : Next 7 statements have been inserted.
285 *                     (Two new labels LISTDC98 and LISTDCT99 added here)
286 *
287 * Description : To print P' for CS-386 program file in command LIST DC T
288 * ************************************************************************
289          BNEH      4,F4,LISTDC99                   JUMP IF NOT 386 PROG FILE
290          MVI       C'P',K
291          SB        TWRITE
292          MVI       X'27',K                         MOVE ' TO K
293          SB        TWRITE                          PRINT P' FOR 386 PROG
294          SB        TWRIT2SP
295          B         LISTDC98                        GOTO PRINT REST FILE INFO
296 LISTDC99 MVI       C'P',K
297          BEQH      8,F4,LISTDC1
298          MVI       C'D',K
299          BEQH      0,F4,LISTDC1
300          MVI       C'?',K                          UNDEFINED FILE TYPE (RELEASE 1.5)
301 LISTDC1  SB        TWRITE                          PRINT 'D' IF DATA FILE; 'P' IF PROGRAM FI
302          SB        TWRIT3SP                        PRINT 3 SPACES
303 LISTDC98 TAP       ,C
304          TPA+2,R   ,C                              GET START ADDRESS OF FILE
```

Fix For : LOAD DC T "File Name"

Description of the problem :-

On execution of LOAD DC T for CS386 format program file results in an error, D82 : File Not In Catalog Index.

Cause of the problem :-

In routine FILENMXA of file BPMVP41M checks are made on only '80' type (old mvp 2200 format) PROGRAM file and not on '40' type of file.

Changes in code :-

The code is modified to take into consideration '40' type of PROGRAM files also.

File : BPMVP41M.

```
44 FILENMXA BNEH      1,F3,ERROR#82                BRANCH IF FILE NOT FOUND
45          BNEL      0,F3,ERROR#82                BRANCH IF FILE SCRATCHED
46          TAP       ,C
47          TPA+2,R   ,C                           GET FILE TYPE
48
49 * ***************************************************************************
50 * Date : 02/14/91
51 *
52 * Bug : On LOAD DC T command, gives "File not found" for CS-386 program file.
53 *
54 * Change in Program : Inserted next three statements.
55 *
56 * Description : Check for CS-386 program file code(04).
57 *
58 * ***************************************************************************
59
60          BNEH      4,CL,*+3
61          BNEH      8,F0,*+2
62          MVI       40,F0                        IF F0=80 AND CL=40,THEN F0=40
63          XOR       F0,CL,F1
64          BNEH      0,F1,ERROR#82                ERROR IF WRONG TYPE OF FILE
```

TEST RESULTS

CONTENTS:

1. Background printing on local printer

2. LIMITS

3. MOVE T/xyy, to T/xyy

4. LIST DC T/xyy

5. LOAD DC T

From : Ms. Jayashree S (QA) 17/7/91

TEST RESULTS (MVP BASIC -2 FROM VERSION 3.4 to 3.5)

The bugs encountered in the version 3.4 of MVP Basic-2 which have been fixed, have been tested in the new version MVP Basic-2 version 3.5, the results of which are listed below:

1. Background printing on local printer

The background printing was resulting in an output without linefeeds after carriage return, though the printer driver was 'ON'. (Exhibit 1.1)

The LIST DT command did not display the details of the local driver in background printing (Exhibit 1.2)

Test: Background printing was tested by running a small program to print first twenty lines of text in the foreground and then proceeding to print twenty lines of text in the background. It was found that printing in the background resulted in an output with linefeeds. (Exhibit 1.3)

The Command LIST DT was entered. The device table was listed and the details of the local printer driver was also present. (Exhibit 1.4)

2. LIMITS T (Filename), A,B,C,D

This command was returning a value of 2 in D as file status of a CS-386 format program file and -2 as file status of a CS-386 format scratched program file. (Exhibit 2.1)

Test: The command LIMITS T "@CLOCK1", A,B,C,D was entered, where @CLOCK1 is the scratched CS-386 program file. When the values of A,B,C,D were printed, D displayed a status value -1. Again, the command LIMITS T "@CLOCK2", A,B,C,D was entered, where @CLOCK2" is an active CS-386 active program file. When the values of A,B,C,D were printed. D displayed a status value of 1. (Exhibit 2.2)

3. MOVE T/xyy, TO T/xyy,

The MOVE statement could not successfully copy program files of the CS-386 format from one storage medium to the next. (Exhibit 3.1)

Test: The command MOVE T/D10, TO T/D21, was entered. It was found that all the files were copied from the source drive D10 to the target drive D21. (Exhibit 3.2)

4. LIST DCT/xyy

On execution of this command, the type of the CS-386 format program file appeared as a "?" and that of a CS-386 format scratched program file appeared as "S?". (Exhibit 4.1)

Test: The command LIST DCT was entered with the default drive as D10. The listing of the names of files appeared with the CS-386 format program file having the type P' and the CS-386 format scratched program file with the type SP'. (Exhibit 4.2)

5. LOAD DC T ("File Name")

Loading of CS-386 format program files resulted in an error D82, and the program was not being sucessfully loaded.

Test: The command LOAD DC T "@CLOCK2" was entered. There was no error message and the CS-386 program file was successfully loaded.

Doc # 0738A/Js/Sp/

exhibit 1.1

```
TEST PRINTING ON LOCAL PRINTER (204) WITH BASIC-2 RELEASE 3.4
FOREGROUND PRINTING.....
LINE :            1               ABCDEFGHIJKLMNOPQRSTU
LINE :            2               ABCDEFGHIJKLMNOPQRSTU
LINE :            3               ABCDEFGHIJKLMNOPQRSTU
LINE :            4               ABCDEFGHIJKLMNOPQRSTU
LINE :            5               ABCDEFGHIJKLMNOPQRSTU
LINE :            6               ABCDEFGHIJKLMNOPQRSTU
LINE :            7               ABCDEFGHIJKLMNOPQRSTU
LINE :            8               ABCDEFGHIJKLMNOPQRSTU
LINE :            9               ABCDEFGHIJKLMNOPQRSTU
LINE :            10              ABCDEFGHIJKLMNOPQRSTU
LINE :            11              ABCDEFGHIJKLMNOPQRSTU
LINE :            12              ABCDEFGHIJKLMNOPQRSTU
LINE :            13              ABCDEFGHIJKLMNOPQRSTU
LINE :            14              ABCDEFGHIJKLMNOPQRSTU
LINE :            15              ABCDEFGHIJKLMNOPQRSTU
LINE :            16              ABCDEFGHIJKLMNOPQRSTU
LINE :            17              ABCDEFGHIJKLMNOPQRSTU
LINE :            18              ABCDEFGHIJKLMNOPQRSTU
LINE :            19              ABCDEFGHIJKLMNOPQRSTU
LINE :            20              ABCDEFGHIJKLMNOPQRSTU
BACKGROUND PRINTING STARTS HERE..ABCDEFGHIJKLMNOPQRSTU
```

Exhibit 1.1

```
TESTING OF COMMAND 'LIST DT' ON SYSTEM PRINTER WITH BASIC-2 RELEASE 3.4
FOREGROUND PRINTING.....


CI     /001                              CO     /005   width 80
INPUT  /001                              PRINT  /215   width 80
PLOT   /413                              LIST   /215   width 80
TAPE   /000

#0     /320                              #8     /000
#1     /000                              #9     /000
#2     /000                              #10    /000
#3     /000                              #11    /000
#4     /000                              #12    /000
#5     /000                              #13    /000
#6     /000                              #14    /000
#7     /000                              #15    /000

MDT:       /004       /015-01    /310       /320       /340       /01C       /09C
/01F       /09F       /01D       /09D       /01E       /09E       /311       /312
/313       /314       /330       /03B       /03D       /0FB       /0FF       /0FA
/0FE       /0FD       /03A

PDT: /004 @PM018V2 ON    /015 @PM018V2 ON


BACKGROUND PRINING STARTS HERE....


CI     /001                              CO     /005   width 80
INPUT  /001                              PRINT  /215   width 80
PLOT   /413                              LIST   /215   width 80
TAPE   /000

#0     /320                              #8     /000
#1     /000                              #9     /000
#2     /000                              #10    /000
#3     /000                              #11    /000
#4     /000                              #12    /000
#5     /000                              #13    /000
#6     /000                              #14    /000
#7     /000                              #15    /000

MDT:       /004       /015-01    /310       /320       /340       /01C       /09C
/01F       /09F       /01D       /09D       /01E       /09E       /311       /312
/313       /314       /330       /03B       /03D       /0FB       /0FF       /0FA
/0FE       /0FD       /03A

PDT: /015 @PM018V2 ON
```

Exhibit 1.8

```
TEST PRINTING ON LOCAL PRINTER (204) WITH BASIC-2 RELEASE 3.5
FOREGROUND PRINTING.....
LINE              1               : ABCDEFGHIJKLMNOPQRSTUVWXYZABCDEF
LINE              2               : ABCDEFGHIJKLMNOPQRSTUVWXYZABCDEF
LINE              3               : ABCDEFGHIJKLMNOPQRSTUVWXYZABCDEF
LINE              4               : ABCDEFGHIJKLMNOPQRSTUVWXYZABCDEF
LINE              5               : ABCDEFGHIJKLMNOPQRSTUVWXYZABCDEF
LINE              6               : ABCDEFGHIJKLMNOPQRSTUVWXYZABCDEF
LINE              7               : ABCDEFGHIJKLMNOPQRSTUVWXYZABCDEF
LINE              8               : ABCDEFGHIJKLMNOPQRSTUVWXYZABCDEF
LINE              9               : ABCDEFGHIJKLMNOPQRSTUVWXYZABCDEF
LINE              10              : ABCDEFGHIJKLMNOPQRSTUVWXYZABCDEF
LINE              11              : ABCDEFGHIJKLMNOPQRSTUVWXYZABCDEF
LINE              12              : ABCDEFGHIJKLMNOPQRSTUVWXYZABCDEF
LINE              13              : ABCDEFGHIJKLMNOPQRSTUVWXYZABCDEF
LINE              14              : ABCDEFGHIJKLMNOPQRSTUVWXYZABCDEF
LINE              15              : ABCDEFGHIJKLMNOPQRSTUVWXYZABCDEF
LINE              16              : ABCDEFGHIJKLMNOPQRSTUVWXYZABCDEF
LINE              17              : ABCDEFGHIJKLMNOPQRSTUVWXYZABCDEF
LINE              18              : ABCDEFGHIJKLMNOPQRSTUVWXYZABCDEF
LINE              19              : ABCDEFGHIJKLMNOPQRSTUVWXYZABCDEF
LINE              20              : ABCDEFGHIJKLMNOPQRSTUVWXYZABCDEF

BACKGROUND PRINTING STARTS HERE .....
LINE              1               : ABCDEFGHIJKLMNOPQRDSTUVWXYZ
LINE              2               : ABCDEFGHIJKLMNOPQRDSTUVWXYZ
LINE              3               : ABCDEFGHIJKLMNOPQRDSTUVWXYZ
LINE              4               : ABCDEFGHIJKLMNOPQRDSTUVWXYZ
LINE              5               : ABCDEFGHIJKLMNOPQRDSTUVWXYZ
LINE              6               : ABCDEFGHIJKLMNOPQRDSTUVWXYZ
LINE              7               : ABCDEFGHIJKLMNOPQRDSTUVWXYZ
LINE              8               : ABCDEFGHIJKLMNOPQRDSTUVWXYZ
LINE              9               : ABCDEFGHIJKLMNOPQRDSTUVWXYZ
LINE              10              : ABCDEFGHIJKLMNOPQRDSTUVWXYZ
LINE              11              : ABCDEFGHIJKLMNOPQRDSTUVWXYZ
LINE              12              : ABCDEFGHIJKLMNOPQRDSTUVWXYZ
LINE              13              : ABCDEFGHIJKLMNOPQRDSTUVWXYZ
LINE              14              : ABCDEFGHIJKLMNOPQRDSTUVWXYZ
LINE              15              : ABCDEFGHIJKLMNOPQRDSTUVWXYZ
LINE              16              : ABCDEFGHIJKLMNOPQRDSTUVWXYZ
LINE              17              : ABCDEFGHIJKLMNOPQRDSTUVWXYZ
LINE              18              : ABCDEFGHIJKLMNOPQRDSTUVWXYZ
LINE              19              : ABCDEFGHIJKLMNOPQRDSTUVWXYZ
LINE              20              : ABCDEFGHIJKLMNOPQRDSTUVWXYZ
```

Exhibit 1.3

```
TESTING OF COMMAND 'LIST DT' ON SYSTEM PRINTER WITH BASIC-2 RELEASE 3.5
FOREGROUND PRINTING.....

CI    /001                              CO    /005   width 80
INPUT /001                              PRINT /215   width 80
PLOT  /413                              LIST  /215   width 80
TAPE  /000

#0    /320

MDT:      /004      /015-01   /310      /320      /340      /01C      /09C
/01F      /09F      /01D      /09D      /01E      /09E      /311      /312
/313      /314      /330      /03B      /03D      /0FB      /0FF      /0FA
/0FE      /0FD      /03A

PDT: /004 @PM018V2 ON   /015 @PM018V2 ON


BACKGROUND PRINING STARTS HERE....

CI    /001                              CO    /005   width 80
INPUT /001                              PRINT /215   width 80
PLOT  /413                              LIST  /215   width 80
TAPE  /000

#0    /320

MDT:      /004      /015-01   /310      /320      /340      /01C      /09C
/01F      /09F      /01D      /09D      /01E      /09E      /311      /312
/313      /314      /330      /03B      /03D      /0FB      /0FF      /0FA
/0FE      /0FD      /03A

PDT: /004 @PM018V2 ON   /015 @PM018V2 ON
```

Exhibit 1.4

Testing of command LIMITS on BASIC-2 Release 3.4

```
LIST DCT

INDEX SECTORS = 00024
END CAT. AREA = 00999
CURRENT END   = 00113

NAME      TYPE  START   END    USED   FREE
@CLOCK      P   00024   00045  00022  00000
@CLOCK1    S?   00080   00086  00007  00000
@CLOCK2     ?   00055   00060  00006  00000
@PM016V2   SD   00105   00113  00009  00000
@PM016V3    D   00046   00054  00005  00004


LIMITS T '@CLOCK2',A,B,C,D


 55              60              6              2


LIMITS T '@CLOCK1',A,B,C,D


 80              86              7              -2
```

Exhibit 2.1

```
Testing of command LIMITS on BASIC-2 Release 3.5


LIST DCT

INDEX SECTORS = 00024
END CAT. AREA = 00999
CURRENT END   = 00113

NAME      TYPE  START   END    USED   FREE
@CLOCK      P   00024   00045  00022  00000
@CLOCK1    SP'  00080   00086  00007  00000
@CLOCK2     P'  00055   00060  00006  00000
@PM016V2   SD   00105   00113  00009  00000
@PM016V3    D   00046   00054  00005  00004


LIMITS T '@CLOCK2',A,B,C,D


 55              60              6               1


LIMITS T '@CLOCK1',A,B,C,D


 80              86              7              -1
```

Exhibit 2.2

Testing of command MOVE on BASIC-2 Release 3.4

MOVE T/D10, TO T/D21,

LIST DCT/D10

```
INDEX SECTORS = 00024
END CAT. AREA = 00999
CURRENT END   = 00113

NAME      TYPE  START   END   USED   FREE
@CLOCK      P   00024   00045  00022  00000
@CLOCK1    S?   00080   00086  00007  00000
@CLOCK2     ?   00055   00060  00006  00000
@PM016V2   SD   00105   00113  00009  00000
@PM016V3    D   00046   00054  00005  00004
```

LIST DCT/D21

```
INDEX SECTORS = 00024
END CAT. AREA = 00999
CURRENT END   = 00054

NAME      TYPE  START   END   USED   FREE
@CLOCK      P   00024   00045  00022  00000
@PM016V3    D   00046   00054  00005  00004
```

Exhibit 3.1

Testing of command MOVE on BASIC-2 Release 3.5

MOVE T/D10, TO T/D21,

LIST DCT/D10

```
INDEX SECTORS = 00024
END CAT. AREA = 00999
CURRENT END   = 00113

NAME      TYPE  START   END    USED   FREE
@CLOCK      P   00024   00045  00022  00000
@CLOCK1    SP'  00080   00086  00007  00000
@CLOCK2     P'  00055   00060  00006  00000
@PM016V2   SD   00105   00113  00009  00000
@PM016V3    D   00046   00054  00005  00004
```

LIST DCT/D21

```
INDEX SECTORS = 00024
END CAT. AREA = 00999
CURRENT END   = 00060

NAME      TYPE  START   END    USED   FREE
@CLOCK      P   00024   00045  00022  00000
@CLOCK2     P'  00046   00051  00006  00000
@PM016V3    D   00052   00060  00005  00004
```

Exhibit 3.2

LIST DC T Command With Release 3.4

```
INDEX SECTORS = 00024
END CAT. AREA = 00999
CURRENT END   = 00113

NAME      TYPE  START   END    USED   FREE
@CLOCK      P   00024   00045  00022  00000
@CLOCK1    S?   00080   00086  00007  00000
@CLOCK2     ?   00055   00060  00006  00000
@PM016V2   SD   00105   00113  00009  00000
@PM016V3    D   00046   00054  00005  00004
```

Exhibit 4-1

LIST DC T Command with Release 3.5

INDEX SECTORS = 00024
END CAT. AREA = 00999
CURRENT END = 00113

NAME	TYPE	START	END	USED	FREE
@CLOCK	P	00024	00045	00022	00000
@CLOCK1	SP'	00080	00086	00007	00000
@CLOCK2	P'	00055	00060	00006	00000
@PM016V2	SD	00105	00113	00009	00000
@PM016V3	D	00046	00054	00005	00004

Exhibit 4-20