WANG

III.D.1M-3

CUSTOMER ENGINEERING

PRODUCT MAINTENANCE MANUAL

2336DW INTEGRATED TERMINAL

APRIL 1982

REORDER NUMBER
729-1087

WANG

III.D.1M-3

CUSTOMER ENGINEERING

PRODUCT MAINTENANCE MANUAL

2336DW INTEGRATED TERMINAL

NOTICE

"This document and the information it contains are the confidential property of, and are propietary to, Wang Laboratories, Inc. This document and the information it contains may not be made public without the written consent of Wang Laboratories, Inc. If for any reason this document is permitted by Wang to leave the physical custody of the company, it is returnable upon the demand of Wang Laboratories, Inc."

COPYRIGHT ©WANG LABS., INC. APRIL 1982

APRIL 1982

REORDER NUMBER
729-1087

WARNING

****
*
* DO NOT OPEN THE SWITCHING POWER SUPPLY UNDER ANY
* CIRCUMSTANCE. EXTREMELY DANGEROUS VOLTAGE AND
* CURRENT LEVELS (IN EXCESS OF 300 VOLTS DC AND UN-
* LIMITED CURRENT) ARE PRESENT WITHIN THE POWER SUPPLY.
*
* DO NOT ATTEMPT TO REPAIR THE SWITCHING POWER
* SUPPLY; IT IS FIELD REPLACEABLE ONLY.
*
* AFTER POWERING THE UNIT DOWN AND DISCONNECTING THE AC
* POWER PLUG FROM THE WALL OUTLET, ALLOW ONE MINUTE
* BEFORE REMOVING THE POWER SUPPLY TO PROVIDE ADEQUATE
* TIME FOR ANY RESIDUAL VOLTAGE TO DRAIN THROUGH THE
* BLEEDER RESISTORS.
*
****

TABLE OF CONTENTS

Section			Page
1	INTRODUCTION		
	1.1	Scope	1-1
	1.2	Purpose	1-1
	1.3	Options	1-1
	1.4	Related Documentation	1-1
	1.4.1	Diagnostics	1-1
	1.4.2	Revision Levels	1-2
	1.4.3	Other	1-2
	1.5	Description	1-2
	1.5.1	CRT Display	1-5
	1.5.2	Keyboards	1-5
	1.5.3	CPU Interface	1-6
	1.6	Specifications	1-6
2	RECEIVING AND INSPECTION		
	2.1	Incoming Inspection	2-1
	2.2	Packing and Unpacking	2-1
	2.3	Terminal Inspection	2-2
3	INSTALLATION		
	3.1	Physical Assembly and Checks	3-1
4	OPERATION		
	4.1	Indicators and Controls	4-1
	4.1.1	CRT Module	4-1
	4.1.2	Keyboards	4-1
	4.2	Operating Features	4-7
	4.2.1	Screen Dump	4-7
	4.2.2	Display Variations	4-8
5	THEORY OF OPERATION		
	5.1	Terminal Control PCB	5-1
	5.1.1	Z-80 CPU	5-1
	5.1.2	CTC	5-3
	5.1.3	Memory	5-3

Section			Page
	5.1.4	CRT Control	5-4
	5.1.5	Communications	5-7
	5.1.6	Keyboards	5-7
	5.1.7	Status	5-8
	5.1.8	I/O Control	5-9
	5.1.9	Printer	5-10
	5.1.10	Control Register	5-10
	5.2	Terminal Controllers	5-10
	5.2.1	Controller Switch Settings	5-11
6	PREVENTIVE MAINTENANCE AND ADJUSTMENTS		
	6.1	Preventive Maintenance	6-1
	6.1.1	General	6-1
	6.2	Adjustments	6-2
	6.2.1	Power Supply Voltage Checks	6-2
	6.2.2	PCB 7456 CRT Display Voltage Checks	6-3
	6.2.3	PCB 7456 CRT Display Alignment Checks	6-3
7	DIAGNOSTICS AND TROUBLESHOOTING		
	7.1	Troubleshooting	7-1
	7.1.1	General	7-1
	7.2	Power-up and Burn-in Diagnostics	7-5
	7.2.1	Description	7-5
	7.2.2	Load Procedure	7-6
	7.2.3	Operating Procedure	7-6
	7.2.4	Error Code Definitions	7-7
	7.2.5	Loopback Connector	7-7
	7.2.6	Keyboard Hex Codes	7-8
8	REMOVAL AND REPLACEMENT		
	8.1	General	8-1
	8.2	Sub-assembly Removal and Replacement	8-1
	8.2.1	CRT Discharge Procedure	8-1
	8.2.2	7743 PCB	8-2
	8.2.3	Power Supply	8-2
	8.2.4	CRT Chassis	8-3
	8.2.5	CRT Rear Panel	8-3
	8.2.6	7456 PCB	8-4
9	ILLUSTRATED PARTS BREAKDOWN		9-1

APPENDICES

A	Recommended Spares List	A-1
B	Direct and Modem Cable Part Numbers	B-1
C	Schematic Diagrams	C-1

LIST OF FIGURES

Number	Title	Page
1-1	2336DW Terminal	1-4
3-1	Terminal Cable Connections	3-3
3-2	Terminal Rear Panels	3-4
3-3	115/230 Switch Location	3-5
3-4	Baud Rate Switch Settings	3-6
4-1	Brightness and Contrast Controls	4-4
4-2	Standard Keyboard	4-5
4-3	Expanded Keyboard	4-6
4-4	Normal Character Set	4-13
4-5	Alternate Character Set	4-14
4-6	Character Set Division	4-15
4-7	Box Graphics Line Placement/Character Position	4-19
4-8	Box Graphics Line Placement/Graphic Character Set	4-19
5-1	2336 Block Diagram	5-2
6-1	Power Supply Voltage Adjustments	6-4
6-2	7456 PCB Adjustments	6-5
7-1	2336DW Troubleshooting Flowchart	7-2

2336DW INTEGRATED TERMINAL

SECTION 1

INTRODUCTION

1.1 SCOPE

This Product Maintenance Manual describes the 2336DW Integrated Terminal. It is intended for use by qualified Customer Engineering personnel. Familiarity with Wang 2200 product line equipment is an essential prerequisite to proper use of this document.

1.2 PURPOSE

This manual provides the information necessary to:

a. Unpack and install each terminal
b. Perform alignment, adjustment, and diagnostic tests
c. Perform basic operation
d. Perform preventive maintenance
e. Perform troubleshooting and fault diagnosis
f. Perform Removal/Replacement procedures of major sub-assemblies

1.3 OPTIONS

Each 2336DW is available with either the standard or the expanded (international) keyboard. The two configurations are as follows:

MODEL	PART NO.	KEYBOARD NO.	DESCRIPTION
2336DW	177-2336	725-2637 STD	2336DW Integrated Terminal with standard keyboard
2326DW	177-2326	725-2652 EXP	2336DW Integrated Terminal with expanded keyboard.

1.4 RELATED DOCUMENTATION

1.4.1 DIAGNOSTICS

There are two types of diagnostics employed by the 2336DW terminal. Power-up and burn in diagnostics (documentation release 9230) are PROM based and installed on the control board. System diagnostics for the 2200 are also available to those who are familiar with loading and operational procedures.

a. Burn-in and Power-up diagnostics are described in section 7.

b. 2200 system diagnostics are described in the Diagnostic Handbook (P/N not available at this time)

1.4.1.1 Hardware and Software Revision Levels

This manual contains valid information for systems with the 7743 board at revision level 3, the 7456 board at revision level 12 and 2200 software at a level of 2.3 for MVP/LVP models and 2.5 for SVP/VP models.

1.4.2 HARDWARE MANUALS

2200 Maintenance Manual - 03-0071-1

1.4.3 OTHER

Corporate Publications Literature Catolog - P/N 700-5294C

1.5 SYSTEM DESCRIPTION

The 2336DW is a two-piece terminal consisting of a CRT display/ electronics module and a detachable keyboard, see figure 1-1. The key ergonomic features of the 2336DW design are a tilting CRT assembly and a detached keyboard. This terminal is Z80-based and consists of a 12-inch diagonally measured CRT, a capacitive-type keyboard, a 12-inch monitor sweep PCB (P/N 210-7456), a switching power supply (P/N 270-0734), and a control PCB (P/N 210-7743-A).

The 2336DW is an enhancement of the 2236DW. It offers the same features of the 2236 plus the added flexibility of a detachable keyboard. The terminal features include:

- Word Processing style cursor control and function keys which support the integrated word processing and data processing functions
- Repeating keys and underlined characters
- Character display attributes including bright, blinking, and underlined characters plus reversed video
- Graphics character set
- Box graphics
- Interface to local printer independent of the CPU
- Self-test diagnostics

The 2336DW terminal can be attached locally to the 2200MVP or LVP CPU at distances up to 2000 feet (606.1 meters), or remotely via modems and telephone lines. Terminals connected to a 2200SVP or VP CPU can be attached locally at a maximum distance of 50 feet (15.2 meters) and 2000 feet (606.1 meters) respectively. Communication between the terminal and the CPU is asynchronous and full-duplex, with selectable line speeds ranging from 300 to 19,200 bits per second (bps). To accelerate communications between the terminals and the CPU, the system performs automatic data compression on information transmitted to each terminal.

Each terminal can support its own terminal printer which can be used for program output. Additionally, hard copy of CRT displays can be created at each terminal site. A dump of the display screen to the terminal printer may be initiated from the keyboard, resulting in the printing of all standard characters present on the screen. The screen dump feature requires no special software and can be performed at any time.

The 2336DW and its controller employ microprocessors to optimize data throughput. For example, strings of four or more identical characters are compressed for transmission into 3-byte blocks. A ready/busy protocol controls information flow between the terminals and the terminal processor. Thus, it is unnecessary for the attached printer to keep up with the serial communication line data rate. These features are automatic and are completely transparent to the 2200 CPU software .

As an added feature, the 2336DW performs self-test diagnostics every time it is turned on. These diagnostics ensure optimum terminal conditions before use. If the unit fails one of the tests, a continuous alarm sounds, alerting the user to the failure. The tests allow a Wang customer service representative to quickly identify the problem and minimize downtime.

Any standard Wang printer or plotter with a 36-pin cable connection may be plugged into the printer connector on the terminal. A Wang supplied direct-connection cable or an optional modem cable plugs into an RS-232-C compatible connector on the terminal.

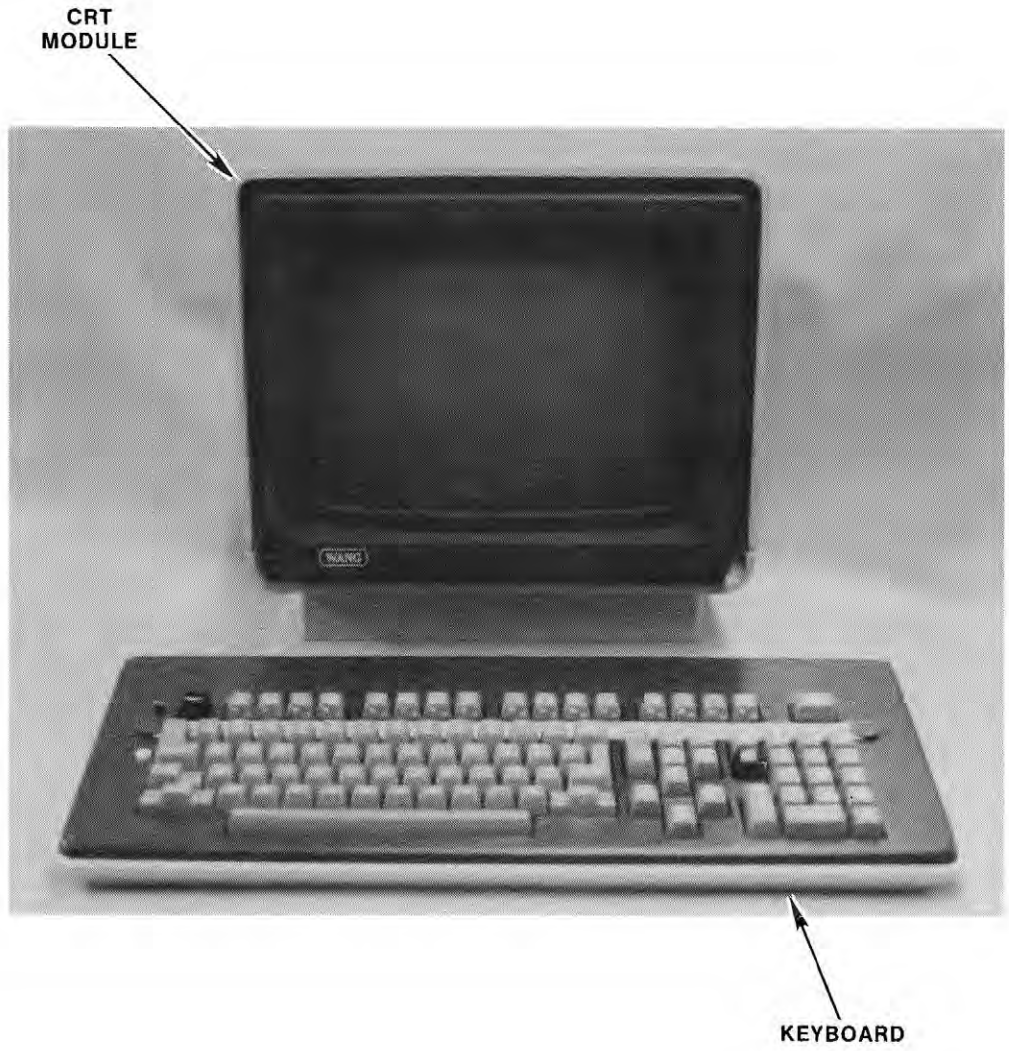

FIGURE 1-1 2336 TERMINAL

1.5.1 CRT DISPLAY

The 2336DW terminal contains a 12-inch (30.5 centimeter) diagonally measured cathode ray tube (CRT) screen display. The CRT displays a full 128-character set, including uppercase and lowercase keyboard characters, some foreign language characters, special symbols, and underlining. The CRT also displays an alternate set of graphic characters and box graphics. All characters may be displayed using one or more of several character display attributes.

The CRT has a 24-line, 80 characters/line capacity (1,920 character positions) for full-screen operator prompting and verification of keyed characters. Brightness and contrast controls provide a sharp clear image on the screen. Display speed is approximately 2,000 characters/second at a 19,200 baud. A cursor, resembling an underscore, indicates the location on the display where the next character will appear. In addition to controlling cursor movement and positioning from the keyboard, a number of codes can be used to manipulate the cursor under program control for specially formatted displays.

1.5.2 KEYBOARDS

1.5.2.1 General

The typewriter keyboard which can generate 88 different ASCII characters, including uppercase and lowercase letters, numbers, and symbols. It also includes a numeric keypad, several program control keys, and 18 program-definable special function keys: 16 numbered keys along the top of the keyboard, and the TAB and GL keys located in the alphanumeric keyboard zone. Each special function key can be used with the SHIFT key for a total of 36 special function keys. The keyboard also contains editing keys (INSERT and DELETE), location keys (NEXT SCRN and PREV SCRN), and cursor control keys (controls movement of cursor in indicated direction -- up, down, right, and left).

1.5.2.2 Standard Keyboard

The 2336DW terminal is equipped with a new combination keyboard which features the conventional typewriter format plus a numeric keypad as well as cursor control, editing and special function keys normally associated with Wang Word Processing systems.

1.5.2.3 Expanded Keyboard. The expanded (international) keyboard has the same features as the standard keyboard plus an additional four keys needed to meet international requirements.

1.5.3 CPU INTERFACE

The 2236MXD and 22C32 TC controller PCBs are part of the 2200 system main frame and interface between the 2200 CPU and the 2336DW terminals. The 2236MXD can support 4 terminals. The 22C32 Triple Controller supports a single terminal. The 2336DW plugs directly into the terminal controller PCB. No additional controllers are necessary.

1.6 SPECICIFICATIONS

Size

Height	15.0 in. (38.1 cm)
Depth	12.8 in. (32.5 cm)
Width	13.5 in. (34.3 cm)

Weight

28.0 lb (12.7 kg)

CRT

Display Size	12 in. diagonal (30.5 cm)
Capacity	24 lines, 80 characters/line
Character Height	0.16 in. (0.41 cm)
Character Width	0.09 in. (0.23 cm)

Character Set

128 characters, including uppercase and lowercase letters; each character is assigned one or more attributes for high- or low-intensity display, reverse video, blinking, or underlining. Additional alternate character set consisting of 64 graphic characters and other special symbols is supplied. Also capable of displaying line-segment (box) graphics, separate from either character set.

Operating Environment

Temperature
50°F to 80°F (10°C to 30°C)
Relative Humidity
35% to 65% noncondensing (recommended)
20% to 80% noncondensing (allowable)

Power Requirements

115 or 230 Vac ± 10%
50 or 60 Hz ± 1.0 Hz
50 Watts

Communication Mode

Asynchronous, full-duplex

Transmission Rates

Manually selectable for each terminal at 300, 600, 1200, 2400, 9600, or 19.2K baud

Character Format

When communicating with a 2200MVP, LVP, SVP, or VP system:
1 start bit, 1 stop bit
8 data bits, plus odd parity (11 bits/character)
Other selectable character formats:
8 data bits, no parity
7 data bits, odd parity
7 data bits, even parity (10 bits/character)

EPROM Complement

L5 - 378-5080-2 Character Generator
L9 - 378-6013-2 Terminal Microcode
L10 - 378-6014-2 Terminal Microcode

SECTION 2

RECEIVING AND INSPECTION

This section contains the information necessary to unpack and inspect the 2336DW Terminal.

2.1 INCOMING INSPECTION

When the equipment arrives, immediately locate the packing slip and note the work order number. Verify the equipment model and serial number as listed on the packing slip.

Before opening the containers, inspect them carefully for signs of damage (crushed edges, puncture holes, tears, etc.). Should damage be noted, promptly file a claim with the carrier and notify the factory:

WLI DISTRIBUTION CENTER
Department #90
Quality Assurance Department
Tewksbury, MA 01876.

State the nature and extent of damage and make arrangements for replacement equipment, if necessary. Be certain to include this information:

WORK ORDER #_____
CUSTOMER NAME_____CUSTOMER #_____
MODEL #_____
SERIAL #_____

2.2 PACKING AND UNPACKING

2336DW terminals are packaged in two cardboard containers with special packing material for protection during shipping. The CRT and keyboard are packaged separately. Circuit boards and other components are installed at the factory.

2.3 TERMINAL INSPECTION

Remove the terminal cover as follows:

a. Stand at the rear of the unit, remove the Phillips-head screws , one on each side of the rear of the CRT unit. Place both hands on the top of the CRT unit, push the cover back along the side tracks, and lift it from the unit. Set the cover aside. Avoid scratching the surface.

Perform a careful internal inspection of the CRT unit. Look for broken or shifted boards or other components, and wiring, screws, or hardware that might have come loose during shipment. Revision levels of particular PCBs used in the 2336DW should be verified as specified in section 1.

NOTES

SECTION 3

INSTALLATION

This Section describes terminal installation procedures.

3.1 Physical Assembly and Checks

Follow the instructions given in this section to connect the 2336DW terminal to the 2200 system. Refer to Figure 3-1 for cable connections.

a. Remove the CRT module cover by removing the the two screws on the rear of the unit. (figure 3-2) Remove packing insert.

WARNING

```
**************************************************************
*                                                            *
*    DO NOT OPEN THE SWITCHING POWER SUPPLY UNDER ANY        *
*    CIRCUMSTANCE.  EXTREMELY DANGEROUS VOLTAGE AND          *
*    CURRENT LEVELS (IN EXCESS OF 300 VOLTS DC AND UN-       *
*    LIMITED CURRENT) ARE PRESENT WITHIN THE POWER SUPPLY.   *
*                                                            *
*    DO NOT ATTEMPT TO REPAIR THE SWITCHING POWER            *
*    SUPPLY; IT IS FIELD REPLACEABLE ONLY.                   *
*                                                            *
*    AFTER POWERING THE UNIT DOWN AND DISCONNECTING THE AC   *
*    POWER PLUG FROM THE WALL OUTLET, ALLOW ONE MINUTE       *
*    BEFORE REMOVING THE POWER SUPPLY TO PROVIDE ADEQUATE    *
*    TIME FOR ANY RESIDUAL VOLTAGE TO DRAIN THROUGH THE      *
*    BLEEDER RESISTORS.                                      *
*                                                            *
**************************************************************
```

b. Remove the label from the ac input connector and verify that it corresponds to the actual voltage (115/230v) selection on the switching power supply (figure 3-3).

c. Connect and secure the keyboard assembly.

d. Locate the POWER switch on the rear panel of the CRT module and insure that the switch is in the OFF (0) position.

e. Insert the terminal ac power cord into the appropriate connector on the rear panel of the CRT module.

f. Insert the terminal ac power cord into an appropriate outlet. DO NOT USE AN EXTENSION CORD. Turn the POWER switch ON (1).

g. Refer to section 6 and perform the indicated power supply voltage checks (6.2.1) and CRT display voltage checks (6.2.2).

h. Turn the terminal AC power switch OFF (0).

NOTE

Burn-in diagnostics can be run at this time if desired. Refer to section 7.2.1 for instructions.

i. Connect the RS-232 cable (P/N 120-2236-25) between the RS-232 connector on the terminal and the RS-232 connector on the 2200 communications port.

j. Set the baud rate switches for 19.2K in accordance with figure 3-4.

k. Each 2336DW terminal is connected to either a 2236MXD Terminal Processor or a 22C32 Triple Controller when configured with a 2200 Central Processing Unit. Existing controllers must be revised to current standards to support the 2336DW terminal as follows:

1. Change the two PROMs on PCB 210-7516-A TRIPLE CONTROLLER DAUGHTER BRD

FROM	TO
378-4092	378-4092-R1
378-4093	378-4093-R1

2. Change the two PROMs on PCB 210-7789-A SVP CONTROLLER BRD.

FROM	TO
378-4092	378-4092-R1
378-4093	378-4093-R1

3. Change the four PROMS on PCB 210-7591-A MUX D BRD. DAUGHTERBORD.

FROM	TO
378-2140-R06	378-2140-R07
378-2141-R06	378-2141-R07
378-2142-R06	378-2142-R07
378-2143-R06	378-2143-R07

4. Change the four PROMs on PCB 210-7816-A TRIPLE CONTROLLER DAUGHTER BRD.

FROM	TO
378-2591	378-2591-R1
378-2449	378-2449-R1
378-2450	378-2450-R1
378-2451	378-2451-R1

NOTE: The above changes do not affect other CPU peripheral devices; ie., all previously supported devices remain compatible after the changes.

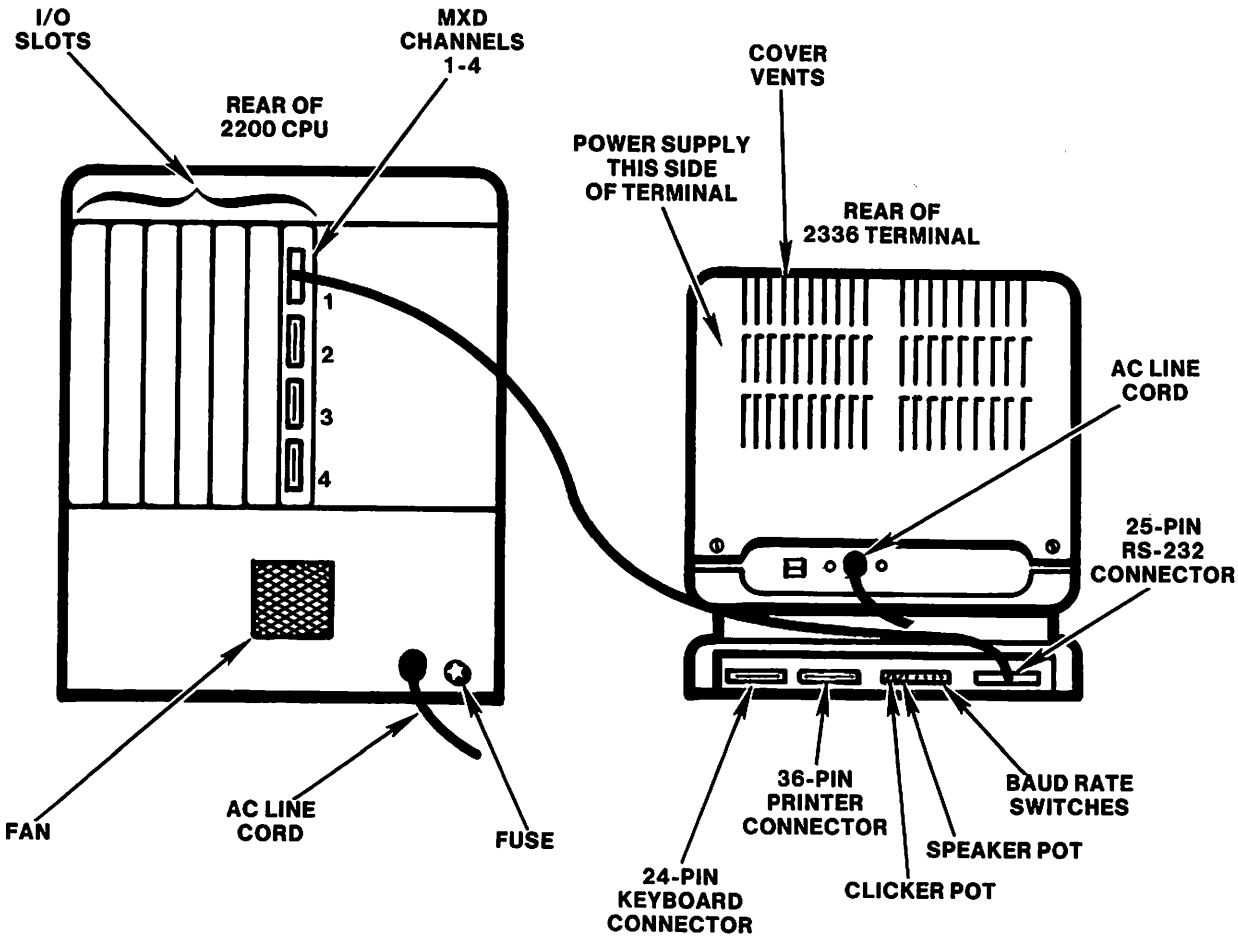

FIGURE 3-1 TERMINAL CABLE CONNECTIONS

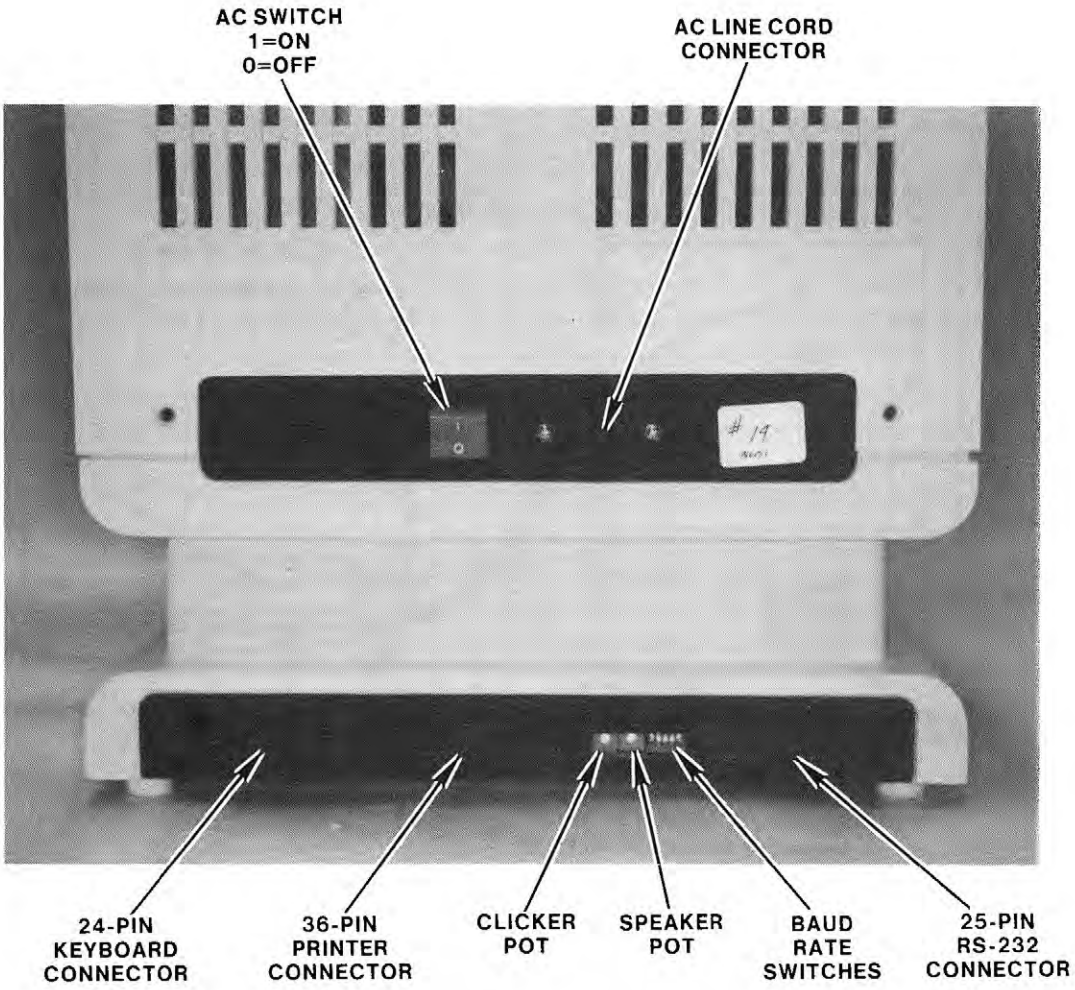

FIGURE 3-2 TERMINAL REAR PANELS

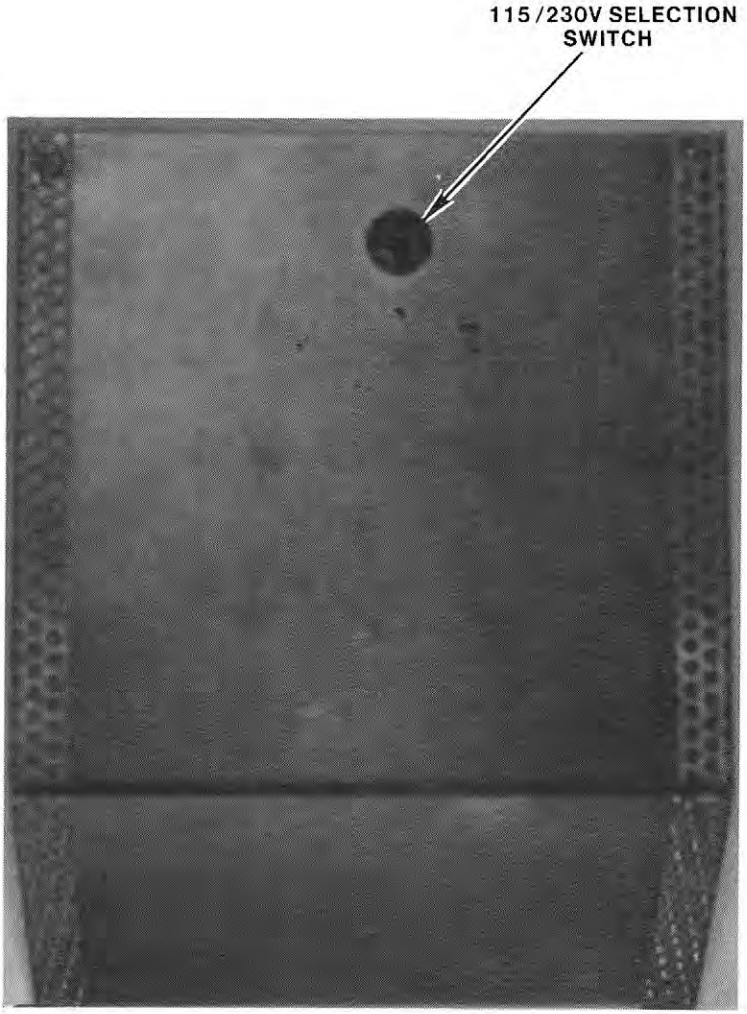

CAUTION

Use a non-metalic wand when making switch selection

FIGURE 3-3 POWER SUPPLY (115/230v) SWITCH LOCATION

SWITCH			BAUD RATE
3	4	5	
DOWN	DOWN	DOWN	300
DOWN	DOWN	UP	600
DOWN	UP	DOWN	1200
DOWN	UP	UP	2400
UP	DOWN	DOWN	4800
UP	DOWN	UP	9600
UP	UP	DOWN	19,200

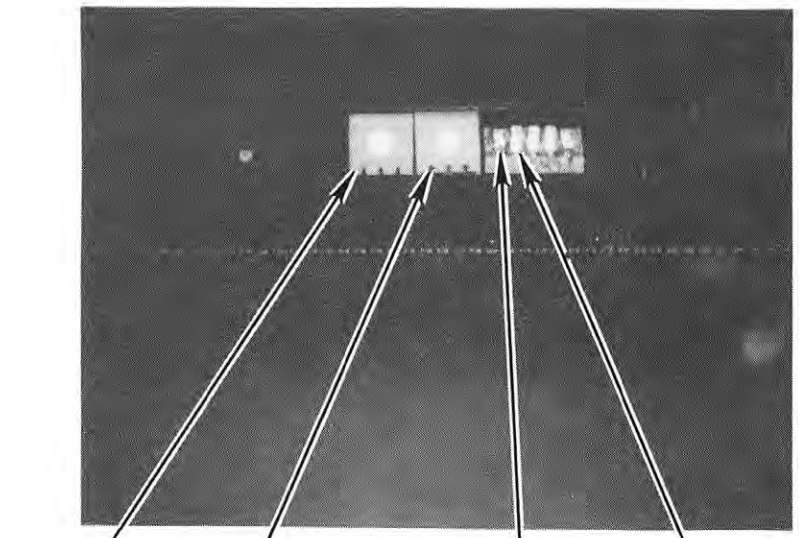

UP	DOWN
EVEN PARITY	ODD PARITY

UP	DOWN
8 DATA BITS	7 DATA BITS

Figure 3-4. Baud Rate Switch Settings

l. Power ON (1) the 2200 and then the 2336DW. At this time, the power-up diagnostics will be initiated. Ten tests are performed on the terminal. Upon successful completion of the tests, the terminal microcode will display the terminal type, baud rate, and word length state. Refer to section 7.2.1 for power-up diagnostic instructions.

NOTE

If the CRT display appears blank, adjust the brightness and contrast controls.

m. Power OFF (0) the 2336DW.

n. Power the 2336DW ON (1) while depressing the special function '13' key. This initiates the alignment pattern for the 2336DW monitor. Perform the CRT display alignment procedures (section 6.2.3)

o. Depress special function '15' key to return control to the terminal microcode. The operator must now depress SHIFTED RESET to obtain control of 2200 system.

p. Refer to the 2200 operator guide; verify terminal operation and ensure that all keys and special keys produce the correct results before proceeding. Figures 4-2 and 4-3 show the physical layout of the standard and international (expanded) keyboards.

q. If the terminal fails during initial operational checkout, refer to section 7.1 (Troubleshooting).

r. Set the electronics module cover straight down on the unit so that the rear of the cover extends approximately two inches behind the rear of the unit. The top and side edges of the cover fit onto a track on the corresponding portions of the unit. Push the cover forward along these tracks until it locks in place. Secure the hardware on the rear of the module.

s. Refer to section 3.4.1(1) to replace CRT module cover.

SECTION 4

OPERATION

4.1 INDICATORS AND CONTROLS

The controls for the 2336DW are located on the CRT module and the keyboard.

4.1.1 CRT MODULE

a. Left side of CRT module - under the cabinet, at top of pedestal (figure 4-1)

BRIGHTNESS wheel - front

CONTRAST wheel - rear

b. Rear of CRT module

SPEAKER pot - right

CLICKER pot - left

4.1.2 KEYBOARD

The 2336DW terminal is equipped with a new combination keyboard which features the conventional typewriter format plus a numeric keypad as well as cursor control and editing and special function keys normally associated with Wang Word Processing systems (figure 4-2). The expanded DW keyboard has an additional four keys (figure 4-3). The following paragraphs describe the actions associated with each group of keys. For convenience of discussion, the keyboard has been divided into four zones as shown in figure 4-2.

Zone 1 - Typewriter Keyboard -- Similar to a standard typewriter, this zone contains the alphanumeric characters, the special purpose characters such as @ # $ ¢ and the arithmatic operators "+ - * / = ", TAB, GL, RETURN and SHIFT keys which perform the following functions:

- TAB sets the format line zone and advances the cursor through successive zones on the screen to facilitate table creation.
- GL (glossary) is a useful function in Word Processing whereby repeatedly used text may be created once, stored on disk and retrieved again with two keystrokes; GL followed by the glossary number.
- RETURN terminates the present text line and repositions the cursor at the beginning of the next line.

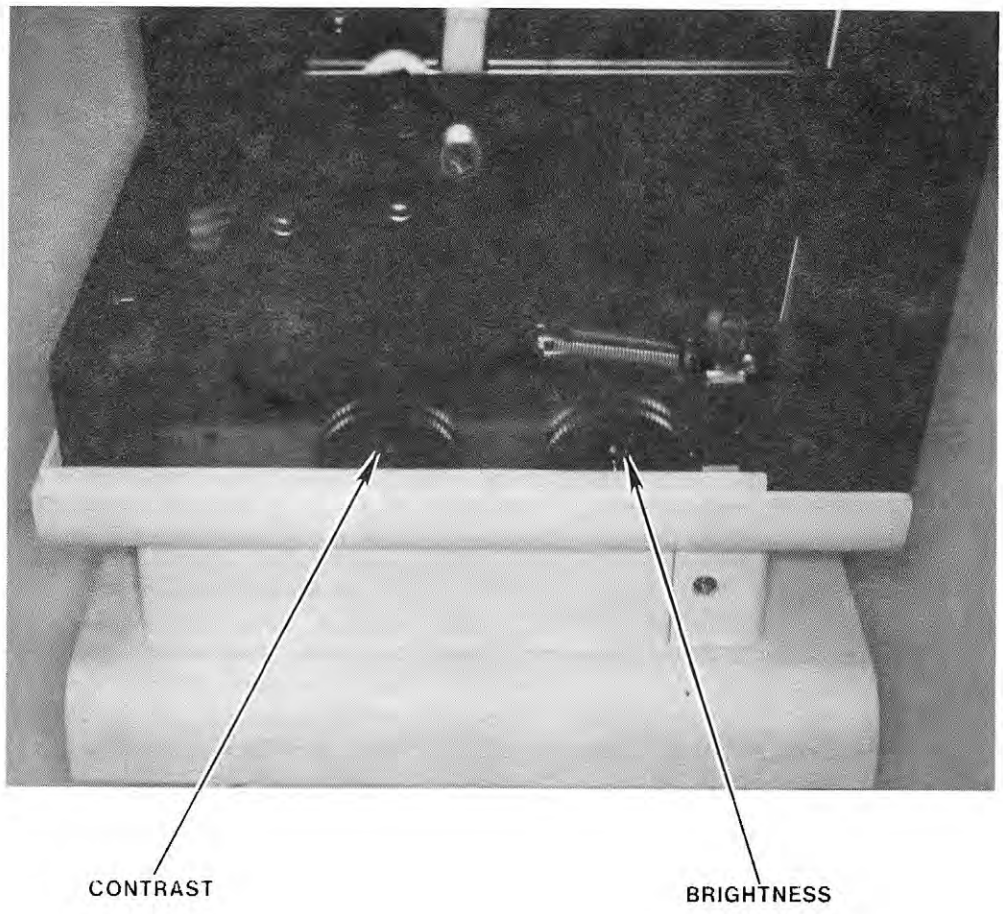

FIGURE 4-1 BRIGHTNESS AND CONTRAST CONTROLS

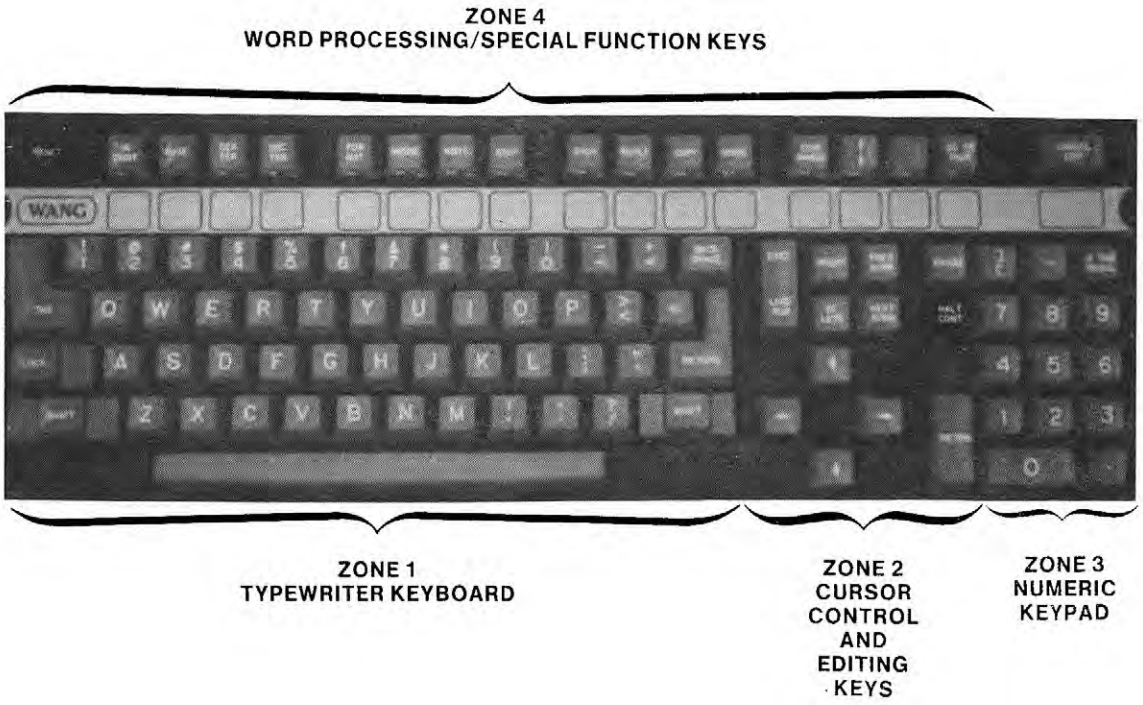

FIGURE 4-2 2336DW STANDARD KEYBOARD

FIGURE 4-3 EXPANDED 2336DW KEYBOARD

Zone 2 - Cursor Control and Editing Keys -- This zone contains Editing keys (INSERT and DELETE), Location keys (NEXT SCRN and PREV SCRN), and Cursor Control keys (control movement of cursor in indicated direction -- up, down, right, and left).

Zone 3 - Numeric Keypad -- The numeric zone is designed like a standard 10-key numeric pad for rapid entry of numeric characters. The numeric keys are grouped here for convenience. Digits may be entered by using the numeric keys in either the numeric or the alphanumeric zone. This zone also includes such keys as ERASE, HALT/CONT, and RETRN.

Zone 4 - Word Processing/Special Function Keys -- Across the top of the keyboard are 16 Word Processing/Special Function keys. When using the word processing software, the Word Processing Function keys simplify document creation and revision. For example, the CENTER key automatically centers a line of text, the MOVE key allows any amount of text to be moved within a document, and the REPLC key allows a character-defined sequence to be replaced with another within a document.

The word processing keys also serve as special function keys that can be set up by the programmer to perform program-defined functions. Since each of these 16 keys may be pressed in conjunction with the SHIFT key, a total of 32 special functions are available. The keys are numbered '0 -- '15 (lowercase) and '16 -- '31 (uppercase). Simultaneously pressing a key numbered '0 -- '15 with SHIFT accesses a function key from '16 -- '31. The function key number is labeled on the front surface of each key. Additionally, the TAB key and the GL key in Zone 1 can be used as special function keys.

Special function keys may be used to perform a variety of tasks, e.g., start program execution, access subroutines, or enter a predefined text string. The operator is informed of the meanings of the special function keys either by screen prompts or by means of the label strip located immediately below this row of keys. In order to perform a given task, a special function key must be defined by the user with a DEFFN' statement in the currently loaded program. The special function keys are also used during master initialization to load the BASIC-3 interpreter and operating system.

The keyboard has two modes of operation, selected by a toggle switch labeled A/A and A/a. The dual mode keyboard is designed for both data processing and word processing applications.

In Programmer's mode (A/A), uppercase alphabetic characters are produced, whether the keyboard is shifted or unshifted. Shifted numeric keys produce symbols and special characters. In Operator's mode (A/a), the keyboard functions as a standard typewriter, producing uppercase and special characters when shifted, and producing lowercase and numeric characters in unshifted operation.

The 2336DW also includes a Caps Lock feature. In either A/A or A/a mode: Caps Lock (activated by pressing the lock key) produces uppercase alphabetic characters; all other characters, such as the numeric keys, are lowercase.

The keyboard allows characters to be underlined. On non-English versions of the keyboard, characters can also be accented. All keys on the keyboard will repeat if held down. The microprocessor in the terminal automatically adjusts the repeat key rate according to the rate at which characters are being echoed to the CRT. The keyboard clicker sounds each time the repeated character is transmitted. Thus, both aural and visual evidence of the repeated character are given to the user. (The repeating key is particularly useful for moving the cursor when editing.)

Special features of the 2336DW keyboard include the following:

- Keyboard Clicker -- The clicker provides an audio response when a key is sufficiently pressed. The volume of the keyboard clicker may be adjusted.

- N-key Rollover -- This feature permits a new key to be pressed and output to the terminal while a previous key is still being held down. This process can continue for any number of keys; each new key pressed takes precedence over any keys already held down. The N-key rollover feature helps eliminate errors during high-speed typing.

- Terminal Alarm -- The alarm provides audio feedback to indicate the occurrence of errors or special conditions, e.g., pressing an undefined special function key, typing beyond a specified field, displaying an error message. The volume of this audio alarm may also be adjusted.

The RESET key, located in the upper-left corner of the keyboard, immediately stops program execution, listing, and I/O operations; clears the CRT; homes the cursor; signals ready; and returns to the console user (Console Input mode). RESET is also used during master initialization and hardware diagnostic operations. The RESET key is an undesirable means of terminating execution and generally should not be used to end program execution; HALT should be used for this purpose. As a protective feature, RESET and HALT are active only in Programmer's mode (A/A), and only if pressed in conjunction with the SHIFT key.

NOTE

On a 2200, RESET affects only the partition to which the terminal is currently attached (the terminal's foreground partition). No other partitions are affected by RESET.

4.2 OPERATIONAL FEATURES

4.2.1 THE SCREEN DUMP

The screen dump feature allows the user to obtain a hard copy record of the CRT on a printer attached to the terminal. Screen dump is a temporary off-line terminal operation which may be initiated only by the terminal operator. In fact, a BASIC-3 program can neither initiate nor detect the activation of a screen dump. Therefore, the screen dump may be used to preserve hard copy records of the screen even after the program has stopped with an error or after a CPU failure. However, this also means it is the terminal operator's responsibility not to activate screen dump while the terminal printer is in use. If screen dump is activated while a program is using the printer, the screen dump output will be inserted on its own separate page, and printing will then resume without missing any characters. To activate a screen dump, use the following procedure.

1. Press the EDIT key and hold it down for approximately two seconds. An immediate click will be heard. The CRT image will be frozen with the image to be dumped.

2. When a second click is sounded, the screen dump has been activated. (If the EDIT key is released before the second click is heard, the key is treated as the EDIT key and the screen image is unfrozen.)

3. The screen image is transmitted to the printer, preceded by a carriage return and form feed, which neatly formats the output. (If a screen dump is activated while a program is using the printer, the screen dump output will be inserted on its own separate page.)

4. The screen dump ends with another form feed.

5. Normal processing of output from the CPU is resumed. (No data is lost, even if the CPU has attempted output to the CRT or printer while the screen dump was in progress.)

During a screen dump, the keyboard remains active. Pressing any key will terminate the screen dump and restore normal processing. If the screen dump fails, make sure the printer is selected and try again. If the screen dump still fails, use the CLEAR button found on many printers. Do not use the terminal's RESET, because it will clear the screen.

It is not possible for a screen dump to produce an exact image of the screen because the terminal microprocessor cannot tell what type of printer is attached to the terminal. A conservative subset of the CRT character set is therefore employed during a screen dump. The USA version of the 2336DW can screen dump all characters between HEX(20) and HEX(7E), including all uppercase and lowercase characters on the keyboard. Underlined characters are translated to their non-underlined equivalents. The actual character set used for screen dump varies among the international versions of the terminal. However, the following general rules do apply.

a. Any character not in the screen dump character set is translated to the number symbol (#).
b. Display attributes are ignored. All characters are printed in the same font and pitch.
c. Character set graphics are also translated to the number symbol (#).
d. Box graphics are ignored.

CAUTION

Since normal printing is interrupted when a screen dump is requested, the screen dump will be inserted into a report already printing. Although screen dumps eject a page before and after a dump, the user's report may be temporarily halted in the middle of the page. For some reports, this may be acceptable; but for preprinted forms such as invoices or customer statements, a screen dump which interrupts current printing could present problems.

4.2.2 DISPLAY VARIATIONS

4.2.2.1 Character Display Attributes

In order to highlight information on the screen, the terminal provides several display attributes that can be selected for any character displayed on the screen. The available display attributes are the following:

a. Bright -- Characters are displayed in high intensity.

b. Blink -- Characters blink.

c. Reverse Video -- The character itself is dark while the character background display is light (dark on light).

d. Underline -- Characters are displayed with an underscore.

4.2.2.1.1 HEX Codes Used to Invoke Display Attributes

Immediately after power is turned on, the terminal displays characters in normal intensity, non-blinking, normal video (light on dark), and non-underlined (this attribute shall henceforth be referred to as simply "normal intensity"). The power-on default meaning of HEX(0E) is bright, non-blinking, normal video, and non-underlined.

The display attribute to be used is selected by sending a command of the following form to the CRT.

HEX(02 04 xx yy 0E)
or
HEX(02 04 xx yy 0F)

where:

02 04 = The control code sequence which indicates to the terminal that special character display attributes are to be selected.

xx yy = The HEX codes specifying the display attributes to be selected, where:

xx = 00 for normal intensity, no blink
02 for bright, no blink
04 for normal intensity, blinking
0B for bright, blinking

yy = 00 for normal video, no underline
02 for reverse video
04 for underline
0B for reverse video, underline

OE or OF = A terminator character which causes the display attributes selected by xx yy to be turned on or off; HEX(0E) turns the selected attributes on, HEX(0F) turns them off.

Note that there are two ways to code the attribute "blinking". However, on the 2336DW, blinking normal intensity and blinking high intensity characters both appear as blinking, high intensity.

4.2.2.1.2 Special Uses of Alternate Display Attributes

a. LIST D

The CPU sends out a HEX(0E) at the beginning of each REM% statement in the program. Thus, comment statements appear in the most recently selected alternate display attribute.

b. 100 PRINT "PROMPT";: LINPUT HEX(0E), A$: PRINT A$

The field to be entered appears in the most recently selected alternate display attribute. When entry is terminated with a carriage return, the alternate attribute is cancelled, so the PRINT statement prints A$ in normal intensity.

c. 150 PRINT HEX(0E); "PROMPT"; HEX(0F);

160 LINPUT A$

This time, only the prompt appears in the most recently selected alternate attribute.

4.2.2.1.3 Summary of Display Attribute Rules

The following list contains the general rules for governing the use of display attributes.

a. HEX(02 04 xx yy 0E) selects and activates a display attribute. Attributes activated in this manner are turned off only by HEX(0F) or by another HEX(0204... sequence. The attribute is not turned off by carriage return, HEX(0D). Thus, it is possible to highlight a portion of either one or several lines.

b. HEX(02 04 xx yy 0F) selects, but does not activate, a display attribute. Normal intensity is activated instead.

c. An isolated HEX(0E) activates the attribute selected by the last HEX(0204... sequence for a maximum of one text line. The attribute remains in effect until the occurrence of either an automatic carriage return, a programmed HEX(0D), or a HEX(0F).

d. Rule 1 takes precedence over Rule 3. If an attribute is selected and activated by Rule 1, a subsequent HEX(0E) will not cause the attribute to be turned off by the next carriage return.

e. An isolated HEX(0F) always turns off the alternate attribute and restores normal intensity.

f. Screen clear, HEX(03), clears the screen to black, but otherwise has no effect on the meaning of HEX(0E) or the attribute currently in effect. Likewise, scrolling the screen scrolls in a black line, but otherwise has no effect on attributes.

g. Programmers are reminded that reverse video spaces are white, not black. Zoned format PRINT statements, i.e., PRINT, PRINT TAB, and the third parameter of PRINT AT, use spaces to clear the screen. These statements will leave white areas on the screen when reverse video is activated.

h. Terminal power on and the RESET key cause normal intensity characters to be selected and the meaning of HEX(0E) to be defined as high intensity.

i. The system considers all codes HEX(00) to HEX(0F) to occupy no space on the output medium. Thus, attribute selection sequences do not cause the system to issue automatic carriage returns or throw off the column count used by TAB and zoned format PRINT statements.

j. Control codes HEX(00) to HEX(0F) do not have attributes. It is not possible to change the attribute of a character by passing the cursor through it with a PRINT AT statement.

k. The meaning of isolated HEX(0E) is maintained by the terminal, not the partition. If a program gives up control of the CRT with $RELEASE TERMINAL, there is a good chance that a program in another partition will change the meaning of HEX(0E) in the course of using attributes.

4.2.2.2 Selection of Character Selection

The 2336DW actually offers two character sets: the normal character set (figure 4-4) and the alternate character set (figure 4-5). The following sequence is used for selecting either character set.

HEX (02 02 xx 0F)

where:

02 02 = The control code sequence which indicates to the terminal that a character set will be selected.

xx = A HEX code specifying the character set to be selected.

If xx = 00 The normal character set is selected. The codes HEX(90) to HEX(FF) are underline versions of characters from HEX(10) to HEX(7F).

If xx = 02 The alternate character set is selected. The codes HEX(80) to HEX(FF) represent the graphic characters and symbols.

0F = A terminator character that signals the end of the character selection sequence.

Any character of either character set can be underlined by using the underline character attribute. Either character set may differ on foreign language versions of the terminal. All versions of the terminal are capable of producing uppercase alphabet, numbers, and most of the special characters used in BASIC programming.

In the character set selection, the following items should be noted.

1. In the alternate character set, the codes HEX(9C) to HEX(BF) are presently undefined and reserved for future expansion. Any use of these codes involves the risk of being incompatible with future use of the terminal.

2. With the exception of the following HEX codes, the character sets of both the DE and the DW terminals are identical. The following HEX code values have been redefined for the normal character set of the DW terminal.

HEX	DW Normal Character Set	DE Normal Character Set
5F	down arrow	left arrow
7F	up/down arrow	section symbol
80	dotted space	blank
8D	left arrow	up/down arrow
8F	page character	paragraph symbol
DF	underlined down arrow	underlined left arrow
FF	underlined up/down arrow	underlined section symbol

3. The following Hex code values have been redefined for the alternate character set of the DW terminal.

HEX	DW Alternate Character Set	DE Alternate Character Set
5F	down arrow	left arrow
7B	up/down arrow	section symbol

NOTE

1. Character set is identical for DE and DW units when terminal is turned on.

2. Print Hex (0202040F) will "turn on" a translation table which is describe above.

3. Print Hex (0202000F), Reset or Clear will "turn off" translation table.

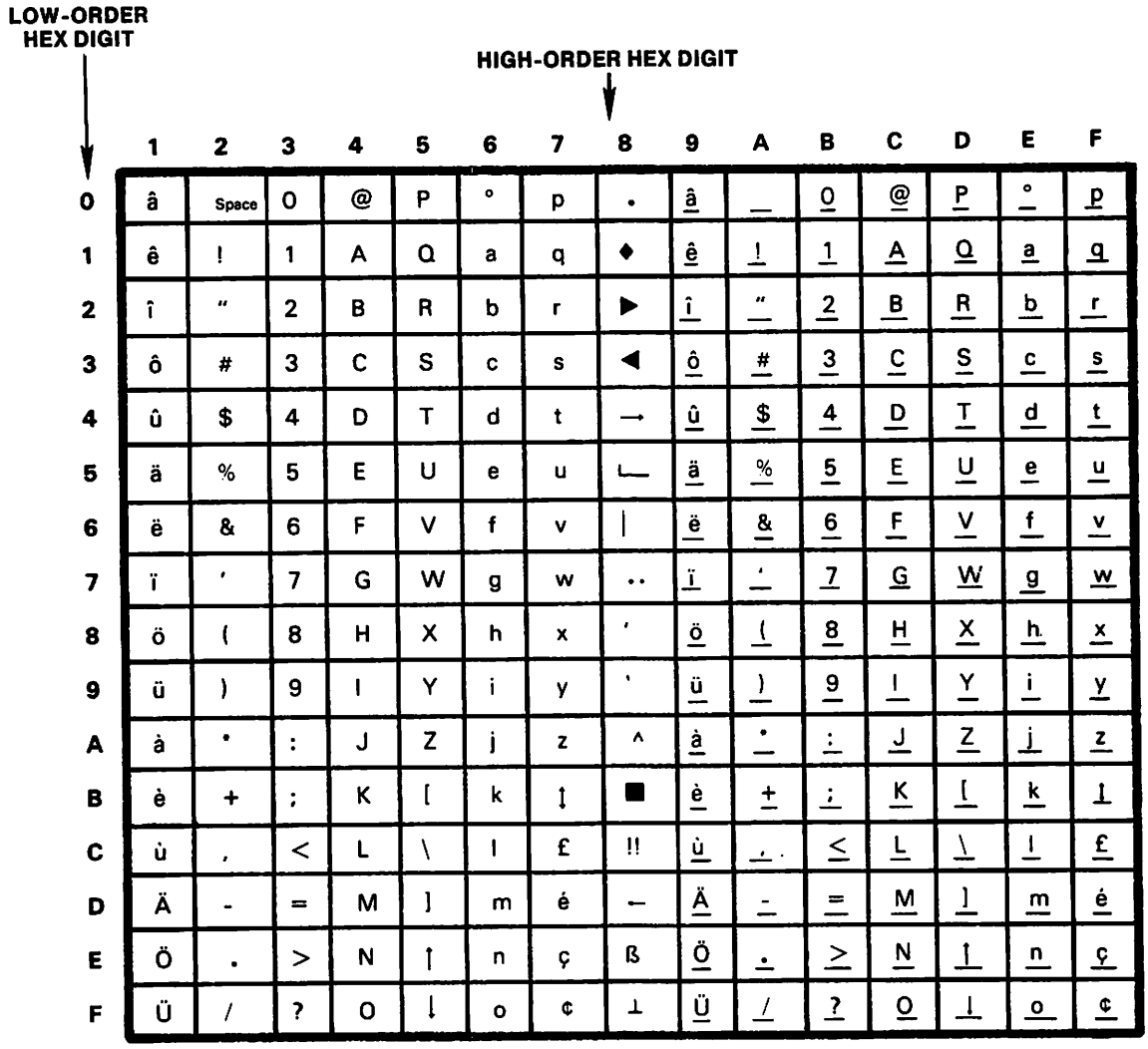

	1	2	3	4	5	6	7	8	9	A	B	C	D	E	F
0	â	Space	0	@	P	°	p	•	â	_	0	@	P	°	p
1	ê	!	1	A	Q	a	q	♦	ê	!	1	A	Q	a	q
2	î	"	2	B	R	b	r	▶	î	"	2	B	R	b	r
3	ô	#	3	C	S	c	s	◀	ô	#	3	C	S	c	s
4	û	$	4	D	T	d	t	→	û	$	4	D	T	d	t
5	ä	%	5	E	U	e	u	⌙	ä	%	5	E	U	e	u
6	ë	&	6	F	V	f	v	|	ë	&	6	F	V	f	v
7	ï	'	7	G	W	g	w	••	ï	'	7	G	W	g	w
8	ö	(	8	H	X	h	x	'	ö	(	8	H	X	h	x
9	ü	)	9	I	Y	i	y	'	ü	)	9	I	Y	i	y
A	à	*	:	J	Z	j	z	^	à	*	:	J	Z	j	z
B	è	+	;	K	[	k	↕	■	è	+	;	K	[	k	↕
C	ù	,	<	L	\	l	£	!!	ù	, .	≤	L	\	l	£
D	Ä	-	=	M	]	m	é	←	Ä	-	=	M	]	m	é
E	Ö	.	>	N	↑	n	ç	ß	Ö	.	≥	N	↑	n	ç
F	Ü	/	?	O	↓	o	¢	⊥	Ü	/	?	O	↓	o	¢

FIGURE 4-4 THE NORMAL CHARACTER SET OF THE DW TERMINAL

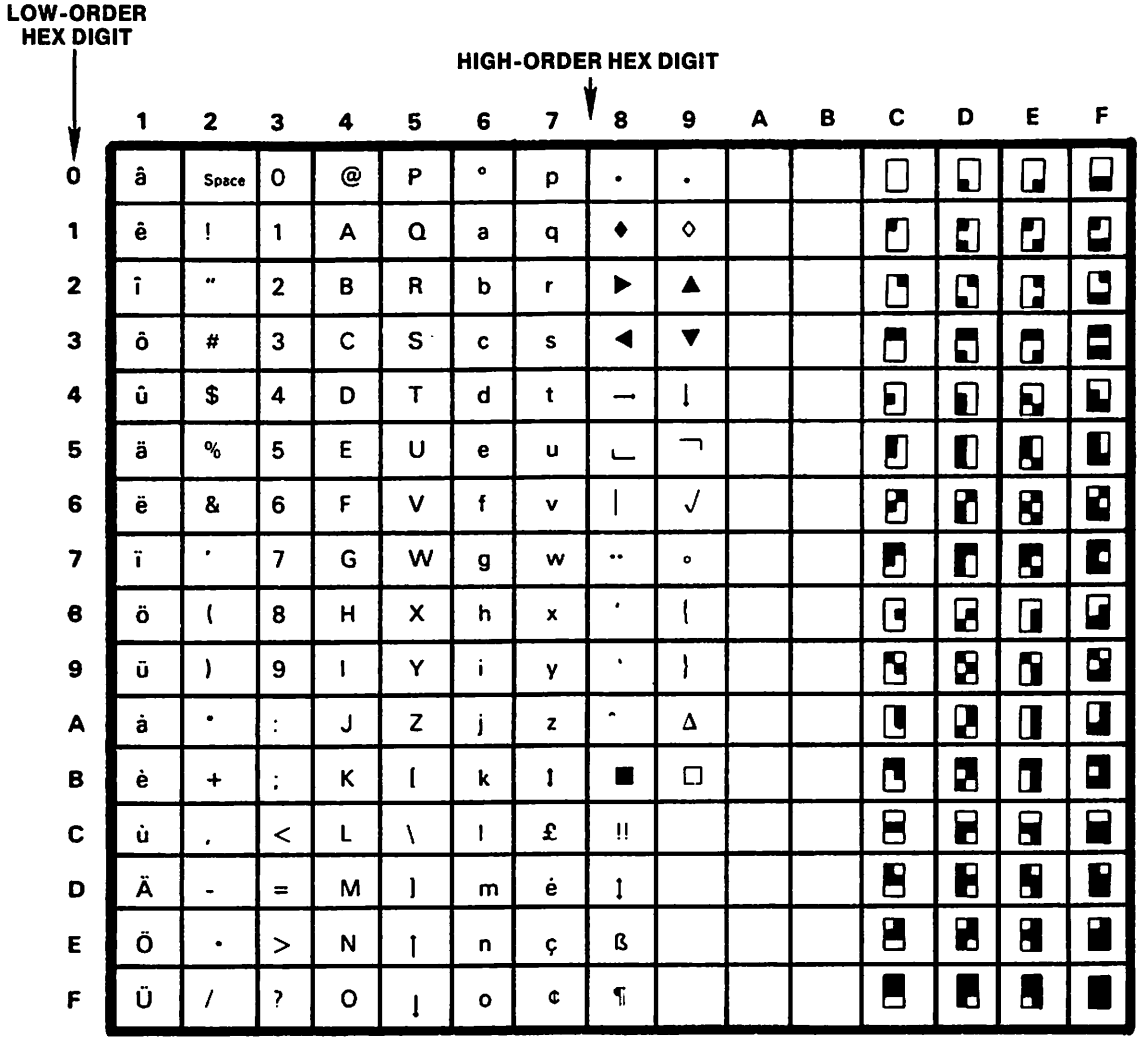

FIGURE 4-5 THE ALTERNATE CHARACTER SET OF THE DW TERMINAL

The 64 graphic characters, HEX(C0) to HEX(FF), are represented by all the combinations of sixths of a character space, where the character space is divided as shown in Figure 4-6. When displayed, graphic characters are extrapolated to fill the entire character position. For this reason, adjacent areas of two graphic characters will touch; thus, continuous lines (bars) of light or dark areas can be displayed on the screen. When combined with display attributes, character graphics are useful for the construction of bar graphs, histograms, and other special displays.

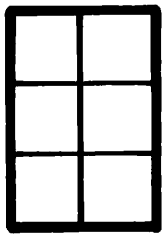

FIGURE 4-6 DIVISION OF A CHARACTER SPACE

The HEX codes for each specific graphic design are determined in the following manner. Use HEX(C0) as the base, with each different segment (each sixth of a character space) equal to the following HEX values.

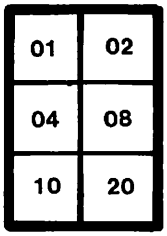

Suppose the design 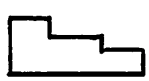 was desired. To obtain the appropriate HEX value add desired segments to the base. For example:

```
   C0      Base
   01
   02      Desired segments
 + 04
   ---
   C7      Resulting HEX code for desired design
```

Therefore, the design 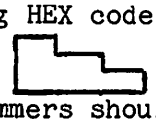 would be coded as HEX(C7). For a quick and easy reference, programmers should also refer to figure 4-5, The Alternate Character Set of the DW Terminal.

4.2.2.2.1 Examples of the Character Sets

```
PRINT HEX(02 02 00 0F); HEX(C6 C5 C2 D2 D5 C1 D2 D9)
```

This statement selects codes HEX(90) to HEX(FF) to represent normal characters HEX(10) to HEX(7F) with underline. Thus, the screen would display the word FEBRUARY with an underline.

```
PRINT HEX(02 02 02 0F); HEX(FF FC F0);
```

This statement selects the alternate character set and displays three character boxes of decreasing heights ( ). These are the characters most useful for constructing vertical bar graphs.

4.2.2.2.2 Summary of Character Set Selection

The rules concerning the use of character set selection can be summarized as follows.

1. HEX(02 02 00 0F) selects the normal character set. The meaning of codes HEX(90) to HEX(FF) are defined to be the normal characters HEX(10) to HEX(7F) with underline.

2. HEX(02 02 02 0F) selects the alternate character set. The codes HEX(80) to HEX(FF) represent the graphic characters and other special symbols.

3. Power on and RESET select the default character set (the normal character set for the standard USA Model 2336DW).

4. Carriage return does not affect character set selection. The sequences given in Rules 1 to 3 are the only methods for changing character sets.

5. As with attributes, the character set selection sequences affect the interpretation of characters at the time they are received by the terminal. Therefore, underlined and graphic characters may be used in different areas of the same display. Once on the screen, a character is modified only by explicitly striking over it with another character or by screen clear.

6. All display attributes can be used with both the normal and the alternate character set.

4.2.2.3 Graphic Box Function

General Form:

BOX (height, width)

where:

height = Expression specifying the height of the box; each unit is the height of a character space.

width = Expression specifying the width of the box; each unit is the width of a character space.

Purpose:

The BOX function is used within a PRINT statement to draw or erase a box or line on a CRT which has box graphics capability. The first expression specifies the height of the box; the second is the width of the box. The sign of the arguments determines whether lines are drawn or erased. If the signs are nonnegative, lines are drawn; negative signs cause lines to be erased. If the box height is zero, a horizontal line is drawn or erased. A width of zero causes a vertical line to be drawn or erased. The BOX function positions the box so that the upper-left corner is at the current cursor position. Drawing a box does not move the CRT cursor.

Examples:

```
PRINT BOX (3, 4);                          -- Draws a 3 x 4 box

PRINT BOX (-3, -4);                        -- Erases a 3 x 4 box

PRINT BOX (0, X);                          -- Draws a horizontal line X
                                              units long

PRINT BOX (-7, 0);                         -- Erases a vertical line 7
                                              units long

PRINT AT (5, 10); BOX (1, 6); "TITLE"      -- Displays TITLE enclosed in
                                              a box
```

Note that in order to include the field TITLE in the last example, the box had to be one character wider than the length of the field, and the left edge of the box had to be one character position to the left of the field to be enclosed. Therefore, to box a field in general, use the statement:

```
PRINT BOX (1, LEN(A$)+1); "Ø"; A$
```

where A$ is the given field, LEN(A$) is the length of the field A$, and the symbol Ø represents one space.

Box graphics can also be used for highlighting entry fields as shown in the following example.

```
CLEAR
10 PRINT "PROMPT"; BOX(1, 17);:LINPUT A$
RUN
```

4.2.2.3.1 Box Graphics

The DW Integrated Terminal can display continuous horizontal or vertical lines, enabling forms to be drawn or information to be separated by lines or boxes. The horizontal line unit is a line segment the width of a character space, but positioned from the middle of one character space to the middle of the next character space. Horizontal lines are displayed between rows of characters.

The vertical line unit has the height of a character space. Vertical lines are drawn through the middle of a character space; the line coexists with the character at that location. (Note that since the height and width of a character space are not the same unit measurement, boxes are not drawn proportionally. However, because of these measurements, a programmer can easily box fields of characters.)

Figures 4-7 and 4-8 illustrate the placement of box graphic lines. Figure 4-7, which shows the smallest possible box, was produced by the statement PRINT BOX(1,1); "AB". It illustrates the placement of horizontal and vertical box graphic lines relative to the character position. Figure 4-8, which was produced by the statement PRINT BOX(1,1); HEX(0202020F); HEX(E1CC), demonstrates where box graphic lines appear relative to character set graphic blobs.

The terminal allows the programmer to consider the CRT as both a box graphics display and a character display that just happen to be displayed on the same screen. While in Character mode, only the characters and their attributes are modified while box graphics remain intact. For example, within a boxed area used to highlight a prompt, the prompt may be rewritten a number of times without altering or erasing the box itself. The one exception to this rule is screen clear, HEX(03) which clears both characters and box graphics. During a box graphics sequence, characters and their attributes are undisturbed.

Because the Character and Box Graphic modes are independent, it is easy to update portions of either display. The third argument of PRINT AT is useful for clearing portions of the display. Though slower than screen clear, the statement PRINT AT (0,0,) is useful for clearing the characters from the screen without disturbing the box graphics.

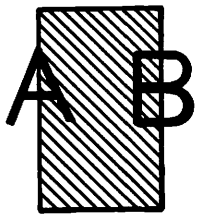

FIGURE 4-7 BOX GRAPHIC LINE PLACEMENT RELATIVE TO CHARACTER POSITION

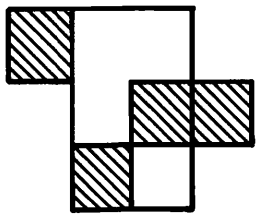

FIGURE 4-8 BOX GRAPHIC LINE PLACEMENT RELATIVE TO GRAPHIC CHARACTER SET

SECTION 5

THEORY OF OPERATION

5.1 TERMINAL CONTROLLER PCB

The 2336DW is a software-intensive terminal which is controlled by the master CPU. The hardware contained on the logic board, PCB 210-7743 is concerned mainly with the management of the display on the screen and the transfer of data and commands between the terminal and the CPU.

The following discussion describes the functions performed by the major components indicated in the block diagram shown in figure 5-1.

5.1.1 Z-80 CPU

This chip supervises the operation of the above cited components, provides control signals and services for their functions and programs them during initializtion and performs limited local processing. The Z80 is sequenced with an operating program in two 2k Bytes of PROMs, L9 and L10 including a power-up diagnostic routine.

The major components of the board are tied together by four main buses:

a. Buffered Address Bus which leads to PIO,"IO Address Decode", CTC and memory
b. Data Bus which connects to PIO, CTC, and UART.
c. Buffered Data Bus which leads to memory and VTAC.
d. Buffered Control Bus which connects to PIO and CTC.

When power is applied to the terminal, the microprocessor is reset and begins executing its program at location 0000 of PROMs L9,10. The program contains the code necessary to initialize the programmable components, VTAC, CTC, UART and PIO for their default functions. The processor also administers a series of tests to verify that vital functions of the board are operational.

When all functions have passed the power-up diagnostics, the microprocessor reads and displays a message which identifies the terminal, its baud rate, parity and the keyboard translation table (USA, international).

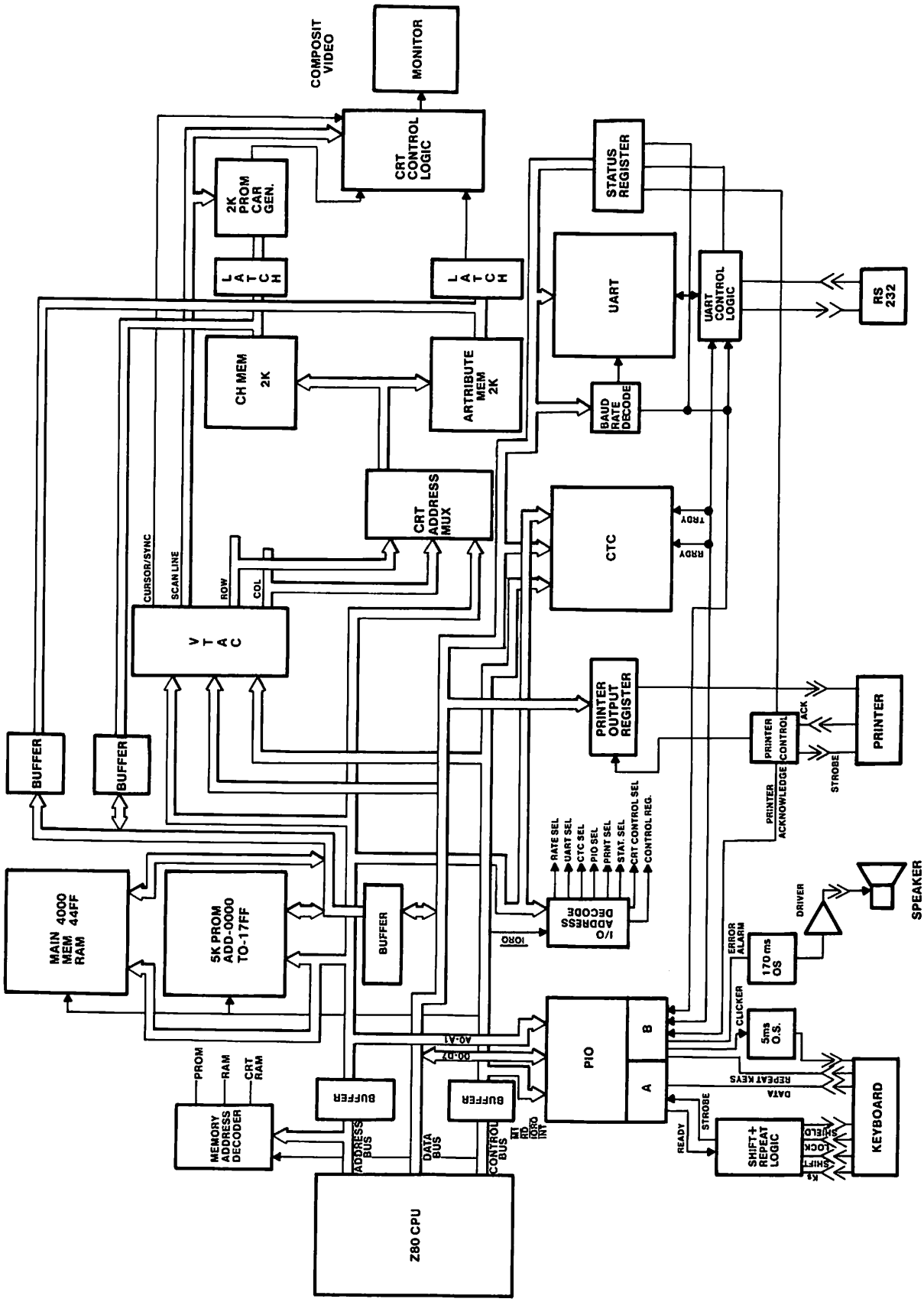

FIGURE 5-1 2336 BLOCK DIAGRAM

Clock Frequency - 2.175 MHZ with a T cycle time of 460 ns.

Interupts - vectored (Z80 mode 2)
Priorities
a. Receiver ready
b. Transmitter ready
c. CTC CH2
d. CTC CH3
e. Keyboard Character Available
f. Printer Acknowledge

5.1.2 CTC

The Counting and Timing Circuit provides the terminal with a general purpose interval timer, mainly used to generate interrupts for the Z80 microprocessor in order to intiate actions which require the use of the Z80 buses such as during transmit or receive.

5.1.3 MEMORY

2336DW memory is divided into three basic sections:
a. PROM, 8K bytes
b. RAM, 2K bytes
c. CRT RAM, 4K bytes

CRT RAM is further divided into two sections:
a. Character Code 2K bytes
b. Display and Forms Control

CRT RAM is addressed by the Z80 as two separate sections, but when operating with the CRT display, it is merged into one section of 2K words by 16 bits.

The CRT RAM ia mapped to the display screen, i.e., a character is addressed according to its row and column position on the screen. Address assignment is as follows :

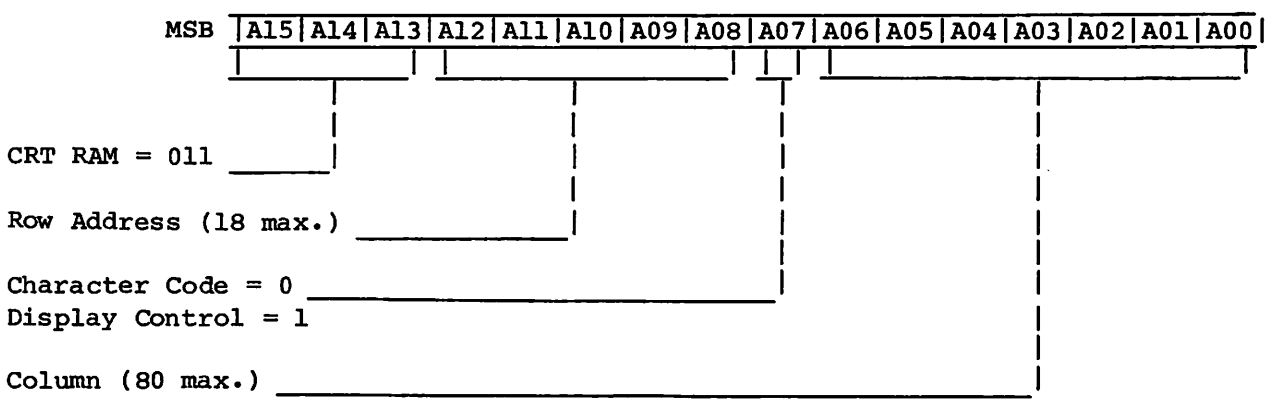

Memory Address Table

Function	From	To	Bytes	MSB A15	A14	A13	A12	A11	A10	A07
PROM	0000	1FFF	8K	0	0	0	X	X	X	X
RAM	4000	47FF	2K	0	1	0	X	X	X	X
CRT Character RAM	6X00	7X4F	2K*	0	1	1	X	X	X	0
CRT Display Control RAM	6X80	7X6F	2K*	0	1	1	X	X	X	1

X = '0' or '1' as appropriate

* Character Row and Column addresses are mapped into 2K bytes. Memory addressing is organized as even pages (128 bytes/page) for Character Code rows and the odd pages for Display Control rows.

5.1.4 CRT CONTROL

This section controls the presentation of video data, stored in CRT RAM, to the CRT monitor. The RAM is organized as 2K words of 16 bits.

The lower byte is the CRT character code and has the following bit assignment:

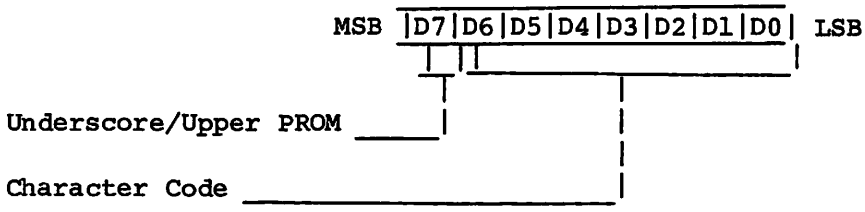

NOTE

The D7 bit will normally cause the character to be displayed with an underline. If a jumper is installed on the board, this bit will select the upper character set PROM.

The upper byte is the CRT Display and Forms Control portion and has the following bit assignments:

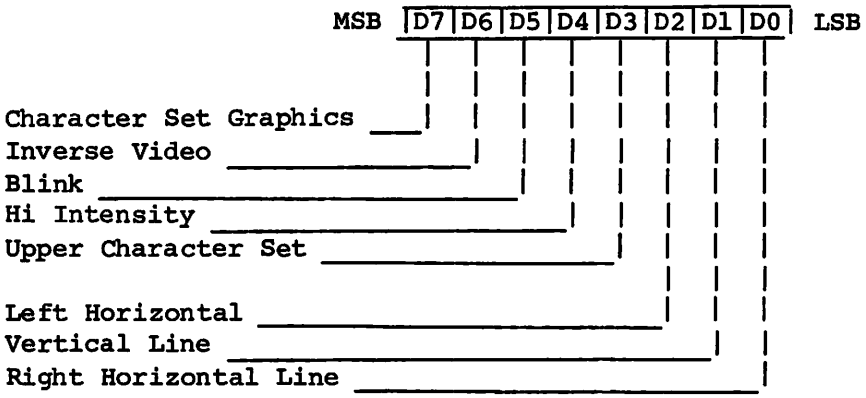

NOTE

The 25th line on the display can only display a left and/or right horizontal line, no character can be displayed.

Underscore is used to underline a character; it should not be used as part of the box graphics.

Upper character set is used to indicate that the character code should be decoded as the upper 128 character set. This set is optional and is used for special characters and/or extended box graphics.

NOTE

Character set graphics is used to indicate to the hardware that the displayed character is graphic and it must fill in the dots between characters.

The heart of the CRT control circuitry is the CRT Video Time Controller (VTAC) intergrated circuit. The VTAC contains the major portion of the logic required to generate the timing signals necessary to present video data on the CRT monitor. This includes the generation of dot-matrix outlines of characters, the horizontal and vertical sweep signals and the placement of characters in a given row and column . In conjunction with "Character Memory", the VTAC maintains the display on the screen through the block labled "CRT Control Logic" which provides the drive for the CRT.

The VTAC must be initialized after power on and before anything is displayed. The following output commands must be executed to initialize the VTAC:

I/O Address	Output Data(Hex)	Function
'40'	'63'	Horizontal Character Count (=100)
'41'	'26'	Mode (non-interlaced)
		Horizontal Sync Width (=4)
		Horizontal Sync Delay (=6)
'42'	'55'	Scans/Data Row (=11)(1)
		Character/Data Row (=80)
'43'	'97'	Skew Bits (=1)
		Data/Row Frame (=24) (3)
'44'	'11'	Scans/Frame (=290) (2)
'45'	'19'	Vertical Data Start (=25)
'46'	'17'	Last Displayed Data Row (=24) (3)

All of the above parameters can be changed at any time during an operation; to insure a 'clean' display, a 'blank screen' command should first be executed.

a. Output Data = '5D' for 50 HZ operation (Scans/Data Row = 12)
b. Output Data = '2B' for 50 HZ operation (Scans/Frame =342)
c. When 25 lines are required I/O address '43' should have a date value of 98 and and address '46' a value of 18.

The VTAC provides the following I/O commands:

Address	CPU I/O	Function
'48'	Input	Read cursor row address
'49'	Input	Read cursor column address
'4A'	Output	Blank screen reset VTAC
'4B'	Output	Up scroll
'4C'	Output	Load cursor column address
'4D'	Output	Load cursor row address
'4E'	Output	Unblank screen

Scrolling without the need to shift the entire CRT RAM is provided by the 'Up Scroll' and 'Last Data Row' commands. When scrolling, software must maintain a last displayed data row count as a memory pointer. Upward scrolling is accomplished by using an 'Up Scroll' command, or loading the incremented data row count, then changing the data of the last displayed data row. When downward scrolling, the decremented data row count is loaded, then the previous last displayed data row data is changed. The data row count must be module 24 when using this scrolling method. The horizontal line graphics in the 25th row connot be used.

5.1.5 COMMUNICATIONS

The 2336DW terminal communicates with the MVP CPU via the standard 2236 async protocol. The 2236DW may be located up to 2000 ft. from the MXD terminal controller. The data is transferred to the UART chip via the OUT '7X' (the low value address lines do not influence chip select). The incoming data is input from the UART chip via an IN '7X'. The UART chip supplies the Z80 CPU with the following status information:

STATUS	LOCATION	ACTIVE
Transmitter Register Empty	Status Reg D4	1
UART Error (Framing,Parity,Overrun	Status Reg D0	0
Receiver Ready	Status Reg D5	0
Transmitter Buffer Ready	Status Reg D7	0

Receiver ready and transmitter buffer ready also go to channels 0 and 1 of the CTC so that they can cause interrupts when they become active (both go active low).

There is a single five-switch, switch bank that also provides control to the communications logic. The low order three switches determine the baud rate selected (they are status bits D3, D2 and D1). The fourth switch selects the word length (0 Indicates seven data bits, 1 indicates eight data bits), the switch is read as bit D5 of the PIO channel B. The fifth switch controls even or odd parity (ON is odd parity, OFF is even parity).

The request to send signal is equal to the value in bit D7 of the PIO channel B. The PIO channel B bit D4 is used to enable or disable parity checking/generation at the UART (1 enables parity).

5.1.6 KEYBOARD

This external device interfaces with the PIO when dealing with the terminal's logic . When a key is struck a code is generated and an interrupt is issued to the Z80 which accepts it based on a priority scheme. Repeated interrupts will be generated when a key is depressed for more than 300 ms, and will continue for as long as the key is held down. The clicker will sound when the key code is accepted.

Keyboard data is input thru the Z80-PIO chip port A; I/O device address '30'. The keycode is presented in complemented binary coded X and Y coordinates as follows:

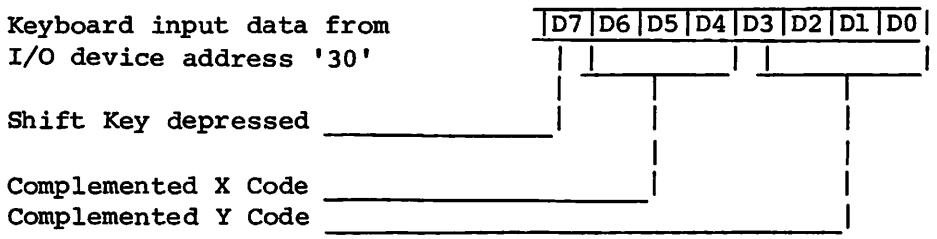

Keyboard control is handled thru the I/O Control Port (Z80-PIO port B), I/O device address '31', as follows:

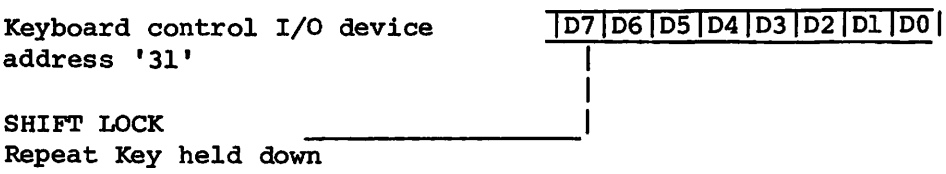

Repeat Key held down indicates an auto repeat key is depressed. Keyboard clicker is activated by OUT '2X' with D0 ON.

Repeat key timing is controlled by the Z80-CTC channel 3, I/O device address '13'.

When a repeat key is detected, a time constant of 19 is loaded (304ms, edge interval = 16ms). CTC channel 3 is set to counter mode, negative edge decrement, interrupt vector already loaded. When the interrupt occurs the ' Repeat Key Held Down' input bit is tested, if '1' the keycode is read from port A again. The time constant is now set to '8' (128ms) for each successive character until the 'Repeat Key Held Down' input bit is returned to '0'.

5.1.7 STATUS REGISTER

The status register, I/O device address '60' is used to detect the following terminal status bits:

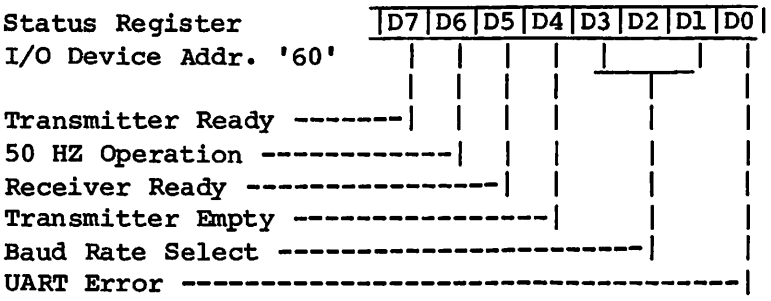

D7 will be zero if the transmitter buffer is empty and the data set is ready and the clear to send signal at the modem interface is active.
D6 will be zero if the unit is to operate at 50 HZ.
D5 will be zero if the receiver buffer is full.
D4 will be one if the transmitter register is empty.
D3-D0 will represent the baud rate selected by the baud rate switches.

Use the following table to set the baud rate switches.

D3 C	D2 B	D1 A	Baud Rate
0	0	0	300
0	0	1	600
0	1	0	1200
0	1	1	2400
1	0	0	4800
1	0	1	9600
1	1	0	19200
1	1	1	19200 (Burn-in test position)

D0 will be a zero if there is an UART error (parity error, overrun or framing error)

5.1.8 I/O CONTROL

This section reviews the bit assignments presented in previous sections for the I/O Control Port (Z80-PIO port B), I/O device address '31'.

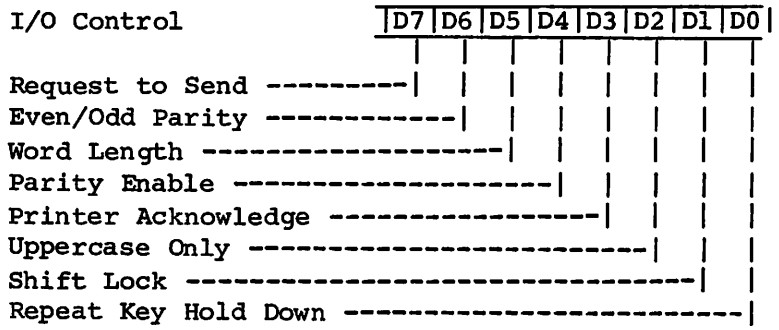

D5 will be a one if eight bit data is selected; zero if seven bit data is selected.

D6 will be a one if even parity is selected.

Before I/O operations can begin PIO port B must be initialized. The following information is output to the port B control, address '33'.

a. Set Vector Interrupt
b. Set mode to control (mode 3)
c. Set bits D7, D4 to outputs and set bits D6, D5, D4, D2 and D0 to inputs.
d. Set for high state interrupt (Interrupt Control Word)
e. Set interrupt mask to allow the Printer Acknowledge interupt (bit D3 = '0', all others = '1').

5.1.9 TO PRINT

Print data is output to a 1 byte buffer register, I/O device address '50'. Each time a byte is loaded the hardware generates a data strobe to the printer.

Printer Acknowledge is returned from the printer each time it receives a character. The I/O control port (Z80-PIO port B) detects the acknowledge and generates a vectored interrupt.

5.1.10 CONTROL REGISTER

One register that is used to control some terminal I/O functions. The register is write only and its bit meanings are described below.

BIT	MEANING
D0	Sound the Keyboard Clicker
D1	Sound the Audio Alarm
D2	Stop Cursor from Blinking
D3	Start Cursor Blinking
D4	Allow CRT Writes Only on Hor. Retrace
D5	Allow CRT Writes at any time

5.2 TERMINAL CONTROLLERS

The 2336DW is attached locally to a CPU by means of either of two devices: a 22C32 Triple Controller that connects the terminal to either a 2200VP or a 2200MVP system, or a 2236MXD Terminal Processor that connects the terminal to a 2200MVP system. By using a combination of two 2236MXDs and one 22C32, a total of nine terminals can be connected to an MVP System. Only one terminal can be connected to a VP system.

The 22C32 and 2236MXD handle I/O operations between the terminal and CPU and act as buffers for data transmitted to/from the terminal. Communications between the terminal and the CPU by means of either a 2236MXD or 22C32 is asynchronous, full-duplex. The 2236MXD offers selectable line speeds ranging from 300 to 19.2K Baud; the 22C32 Triple Controller has a fixed communication rate of 19.2K Baud.

The Wang 3451 modem is capable of handling transmission rates of up to and including 19.2K . Because of this, the 22C32 triple controller, with its fixed 19.2K baud rate, and the 2236MXD selectable baud rate controller can both handle remote terminal applications.

NOTE

Installation of modifications for utilizing the cursor control pad on the terminal in the program development mode will be on a next call basis. When a 2236 MXD Terminal Controller or a 22C32 Triple Controller is repaired, the ECNs (No. 18474 for the Triple and No. 18475 for the MXD) should be installed on the board before it is returned to stock.

5.2.1 CONTROLLER SWITCH SETTINGS

Refer to Paragraphs 3.3.2 through 3.4.2 of the 2200MVP Maintenance Manual (03-0071-1) for information concerning device address and baud rate settings for the 2236MXD. PROMs used on the 2236MXD must be R5 or above, the 210-7290-1 PCB must be at Rev. 1 or greater, and the 210-7291-1 PCB must be at Rev. 2 or greater in order to use an 2336DW with a 2236MXD controller.

Because the 22C32 Triple Controller has a fixed 19.2K baud rate, only device address switches, located on the lower right side of the 210-7515 PCB, are set in the controller. There are three switch banks on the 7515 PCB, the bottom right-most bank is used to set the terminal device address. Set these switches as follows:

Number of Terminals	Switch Settings* Sw1	Sw2	Sw3	Sw4	Sw5	Device Address
One	1	0	0	0	0	00_{16}
Five**	1	0	0	1	0	40_{16}
Nine***	1	0	0	0	1	80_{16}

* 0 = OFF; 1 = ON. Sw1 is the Terminal Enable, it is always set to 1; Sw2 - Sw5 are the Terminal Device Address Switches.

** One 2236MXD; One 22C32 (MVP System only)

*** Two 2236MXDs; One 22C32 (MVP System only)

SECTION 6

PREVENTIVE MAINTENANCE AND ADJUSTMENTS

This section describes preventive maintenance and adjustment procedures for the 2336DW terminal.

6.1 PREVENTIVE MAINTENANCE

6.1.1 GENERAL

Preventive Maintenance should be performed on a regular semi-annual basis to help prevent terminal equipment failures. The suggested plan for the performance of preventive maintenance follows.

6.1.1.1 Cleaning

Remove power from the terminal and clean as follows:

a. Dust keyboard with a soft-bristled brush.

b. Clean the CRT screen, using a good quality glass cleaner and a soft, lint-free cloth.

c. Wipe exterior of terminal, using a damp lint-free cloth.

6.1.1.2 Checks and Adjustments

a. Check and adjust the terminal power supply voltages, as described in section 6.2.1.

b. Check and adjust the CRT display voltages, as described in section 6.2.2.

c. Check for proper character display. Perform the Video Display Alignment Procedure (section 6.2.3), as required.

6.2 GENERAL MAINTENANCE

General maintenance and adjustment procedures are discussed in this section.

6.2.1 POWER SUPPLY VOLTAGE CHECKS

WARNING

```
**************************************************************
*                                                            *
*    DO NOT OPEN THE SWITCHING POWER SUPPLY UNDER ANY        *
*    CIRCUMSTANCE.  EXTREMELY DANGEROUS VOLTAGE AND          *
*    CURRENT LEVELS (IN EXCESS OF 300 VOLTS DC AND UN-       *
*    LIMITED CURRENT) ARE PRESENT WITHIN THE POWER SUPPLY.   *
*                                                            *
*    DO NOT ATTEMPT TO REPAIR THE SWITCHING POWER            *
*    SUPPLY; IT IS FIELD REPLACEABLE ONLY.                   *
*                                                            *
*    AFTER POWERING THE UNIT DOWN AND DISCONNECTING THE AC   *
*    POWER PLUG FROM THE WALL OUTLET, ALLOW ONE MINUTE       *
*    BEFORE REMOVING THE POWER SUPPLY TO PROVIDE ADEQUATE    *
*    TIME FOR ANY RESIDUAL VOLTAGE TO DRAIN THROUGH THE      *
*    BLEEDER RESISTORS.                                      *
*                                                            *
**************************************************************
```

Only the +5v and +12v dc levels are adjustable in this power supply. The -12v and the +22v levels are not adjustable.

a. Power off the 2336DW terminal.

b. Disconnect the RS-232 cable from the rear of the terminal.

c. Power on the 2336DW terminal.

d. Using a digital voltmeter, check the pin 16 on the 25-pin RS-232 connecter for +5v. Adjust the switching power supply for +5v as required.(figure 6-1)

e. Using a digital voltmeter, check the pin 19 on the 25-pin RS-232 connecter for +12v. Adjust the switching power supply for +12v as required.(figure 6-1)

Use connector RS-232 connector, pin 7 as a 0V reference. The power supply voltages should be within the ranges:

Adjust	Voltage	Tolerances
See fig. 6-1	+5v	+4.9 V to +5.1v
See fig. 6-1	+12v	+11.8 V to +12.2v
NOT ADJUSTABLE	-12v	-11.8 V to -12.2v

6.2.2 PCB 7456 CRT DISPLAY VOLTAGE CHECKS

NOTE

Test point A is the heavy etch located at the upper end (furthest from the board connector) of resistor R7 (33 ohm, 1W).

a. Adjust the +12v regulated voltage to +12v ± 0.1v on the power supply (figure 6-1). Use a DVM to check test point A on PCB 210-7456, with pin D, E, or F on the board and L1-1 as ± 0v ground references (figure 6-2).

CAUTION

Use a non-metalic standard tuning wand when adjusting dynamic focus coil Z1

b. Adjust the Dynamic Focus Coil (Z1) to register an amplitude of 300v ac peak-to-peak on an oscilloscope, using pin M as a test point (figure 6-2).

6.2.3 PCB 7456 VIDEO DISPLAY ALIGNMENT PROCEDURE (figure 6-2)

a. Remove the front panel from the CRT module to gain access to the 7456 PCB adjustment pots. To do this, remove the two screws securing the panel to the CRT base.

b. Set both Horizontal hold (R33) and Vertical hold (R15) to the middle of the stable display range.

c. Adjust the vertical size (R24) for a vertical height of 6.5 inches (16.5 cm) on the 12" display. (Use a standard or metric scale.)

d. Adjust the vertical linearity (R18) for character rows of equal height.

e. Repeat c and d until both requirements are met.

f. Adjust the width coil (Z2) for 8 inches (20.3 cm) of horizontal deflection on the 12" display. (Use standard or metric scale.)

g. Adjust the horizontal phasing (R35) for characters centered horizontally on the raster. (Turn up the brightness sufficiently to observe the raster frame.)

h. Adjust the focus (R28) for the best overall screen display.

i. Replace the CRT front panel.

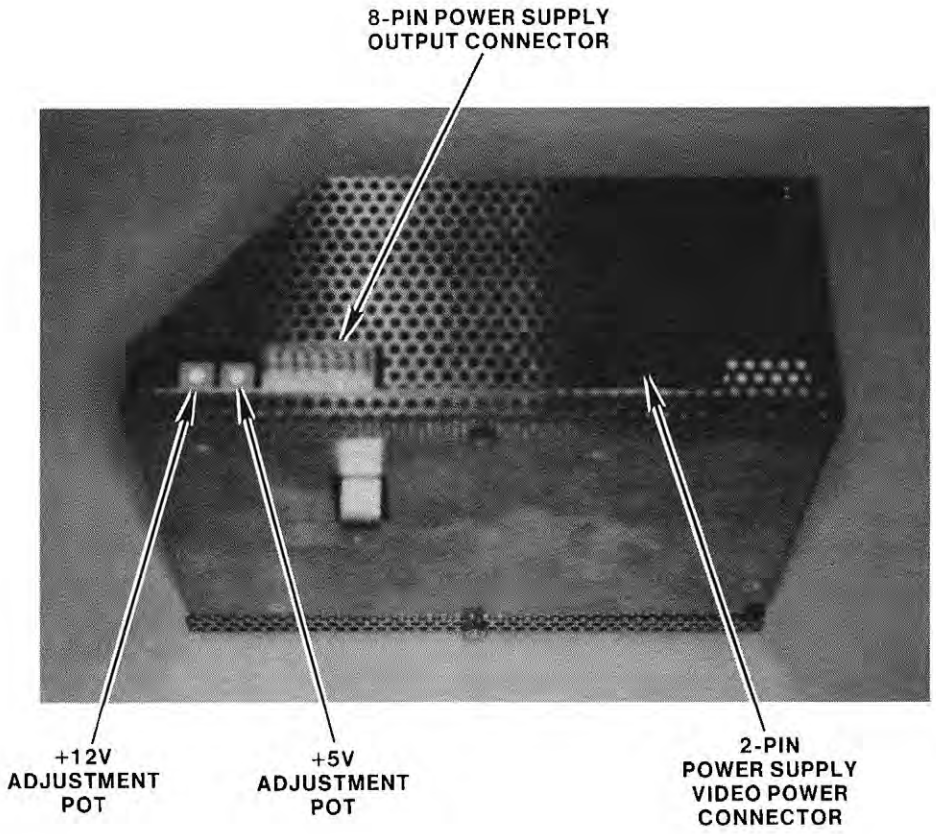

FIGURE 6-1 SWITCHING POWER SUPPLY VOLTAGE ADJUSTMENTS

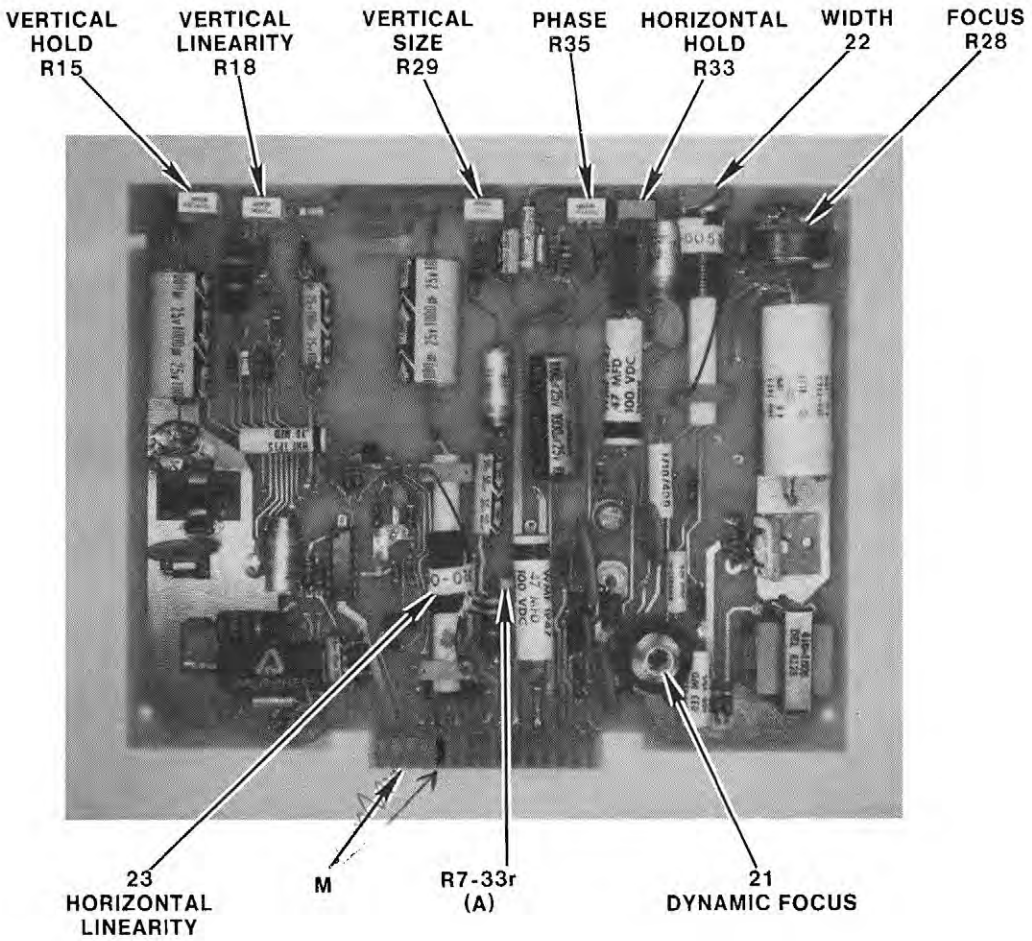

FIGURE 6-2 PCB 7456 CRT DISPLAY ADJUSTMENTS

SECTION 7

TROUBLESHOOTING AND DIAGNOSTICS

7.1 TROUBLESHOOTING

7.1.1 GENERAL

Effective troubleshooting is carried out from a system viewpoint. No procedure can list every potential problem or combination of problems for even a very simple device. Use the troubleshooting chart and supplementary information provided in this section as an aid in the systematic investigation, diagnosis, and repair of the 2336DW.

NOTE

When using the troubleshooting flowchart, procedures that indicate a check process will require either replacing the item being checked or going on to the next procedure.

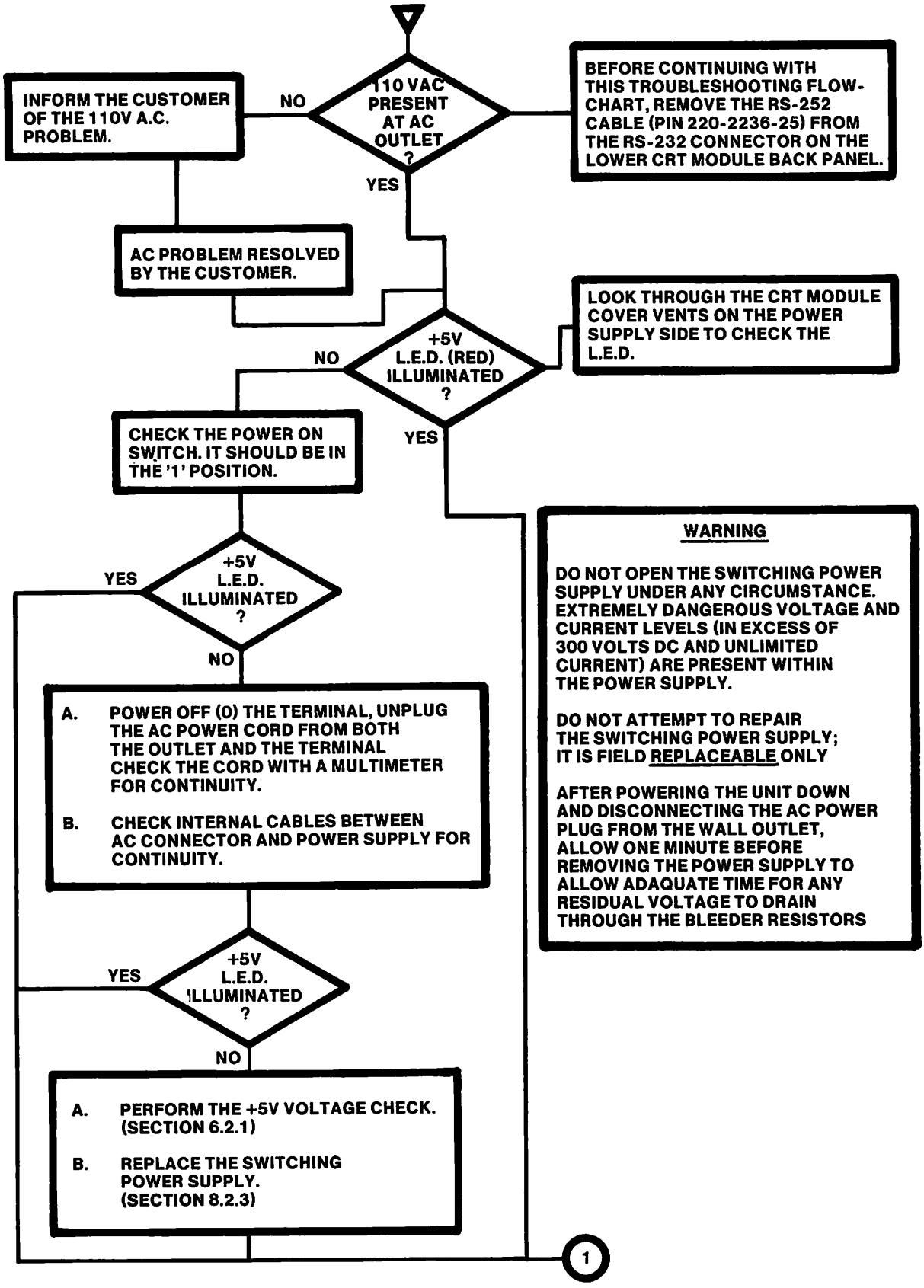

FIGURE 7-1 2336DW TROUBLESHOOTING FLOWCHART (SHEET 1 OF 3)

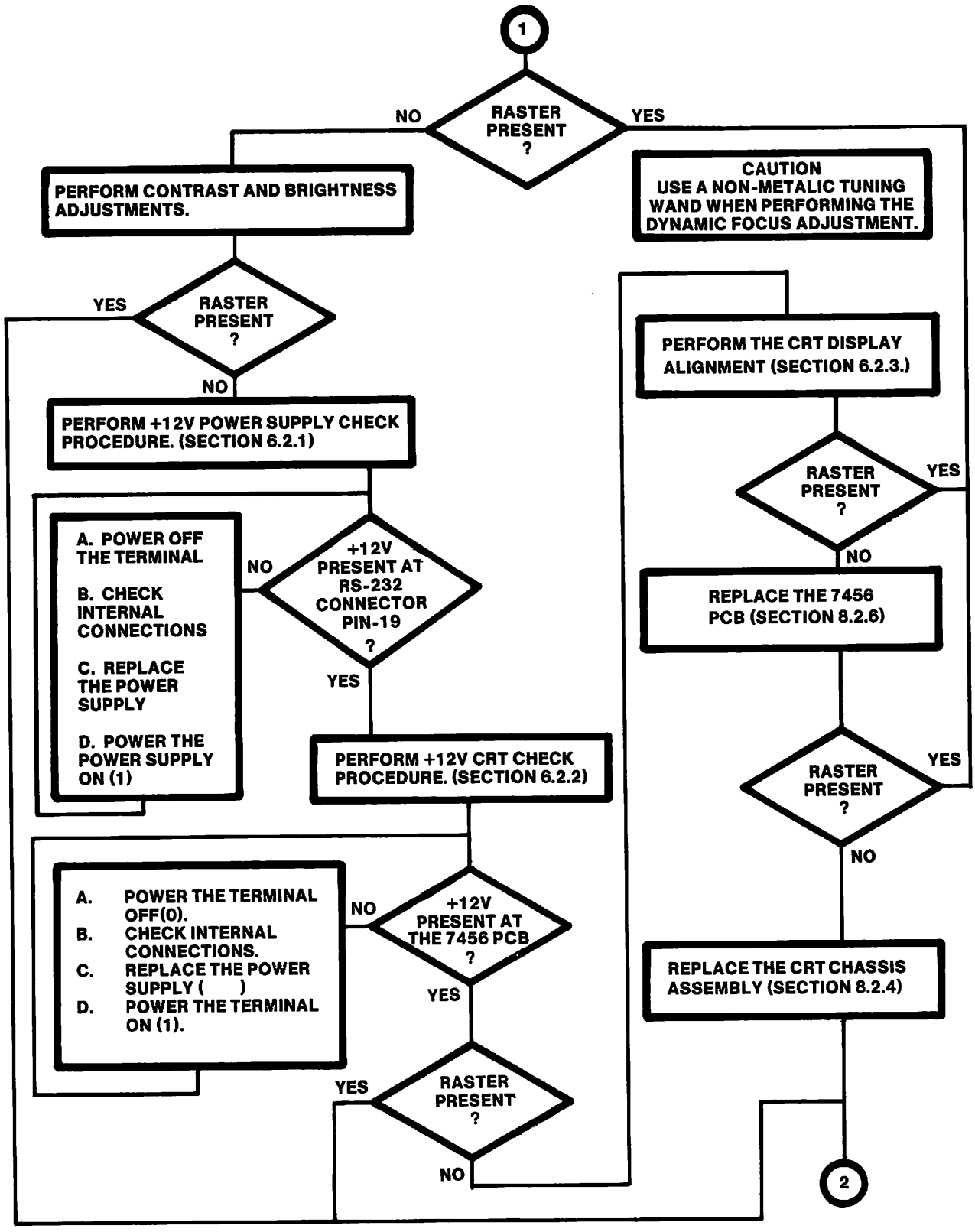

FIGURE 7-1 2336DW TROUBLESHOOTING FLOWCHART (SHEET 2 OF 3)

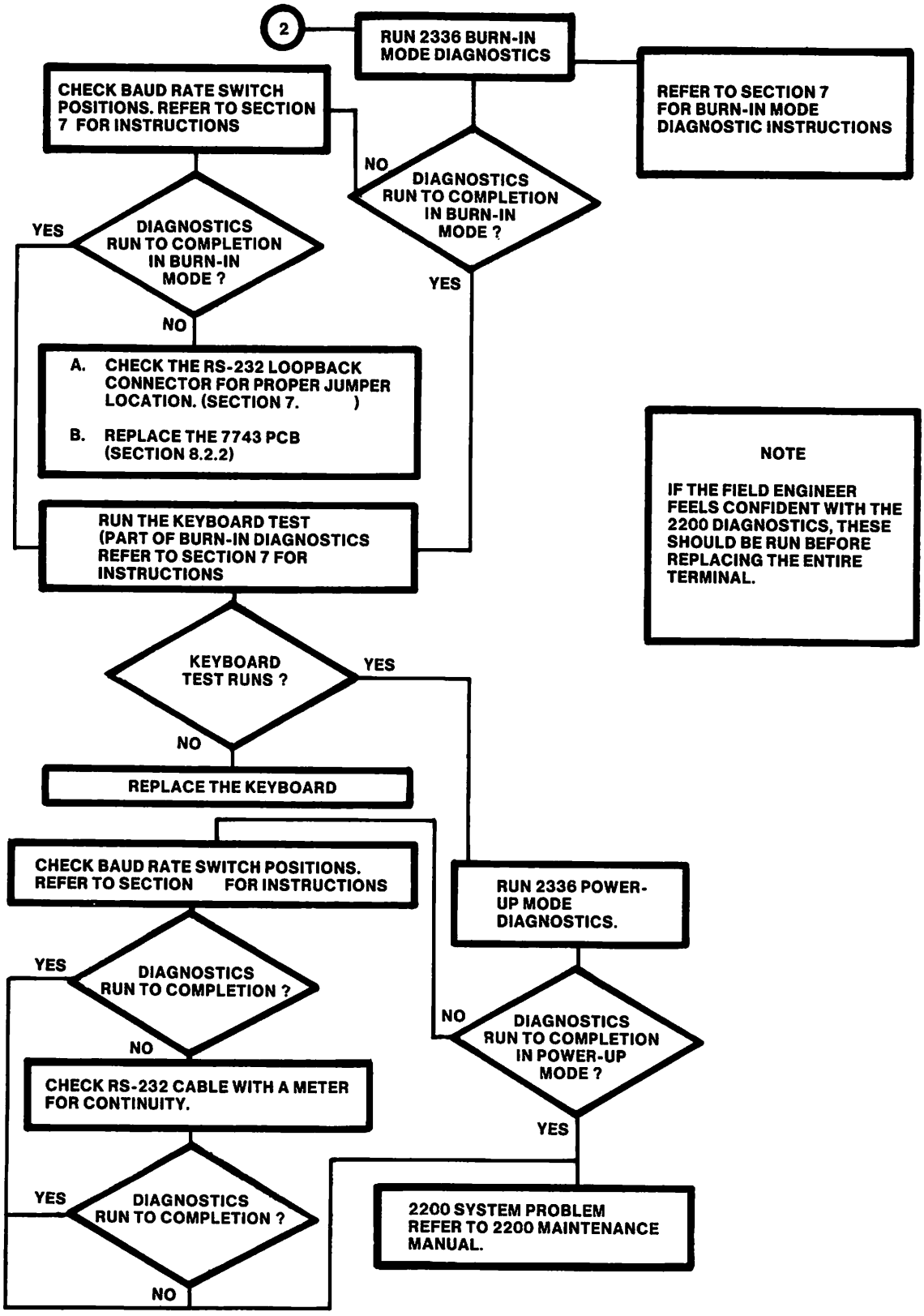

FIGURE 7-1 2336DW TROUBLESHOOTING FLOWCHART (SHEET 3 OF 3)

7.2 POWER-UP AND BURN-IN DIAGNOSTICS

7.2.1 DESCRIPTION

7.2.1.1 Power-up Mode

The diagnostic performs a power-up test and transfers control to the terminal system code.

In the power-up mode, baud rate switches set for 19.2k, ten tests are performed on the terminal before releasing the terminal to the system.

The first test consists of an A register and I register check to test the Z-80 for proper power-up conditions. The next test, after the initialization of VTAC, writes into and reads from the VTAC to insure proper addressing, voltages etc. Then the same tests are run on the PIO before initialization to insure the proper power-up state. Next, the final Z-80 register checks are performed on all foreground and background registers to test for shorts and opens. If the Z-80 or the VTAC fail, the terminal will appear inoperable. If any error occurs an attempt will be made to sound an alarm and display an error message on the screen. The next test is a PROM checksum calculation. The first and second PROMS are mathematically checked for data or addressing errors. If either PROM fails, an audible beep will be sounded and an error message will be displayed on the screen. Next, a RAM check is performed on the main RAM and the attribute RAM to detect shorts and/or opens in the data and addressing lines. If an error occurs, an audible beep is sounded and the failing address is displayed on the screen. The seventh, eighth ninth and tenth tests are performed on the CTC to verify addressing, counter, timer, interrupt and data line capabilities.

7.2.1.2 Burn-in Mode

If the baud rate switches are all switched to the ON (up) position and a loopback connector is installed, the burn-in tests will be performed. In the burn-in mode, the PROM, RAM and CTC tests are performed along with a UART and PIO keyboard test.

The UART test checks the status register for power-up conditions of the UART and then by transmit and receive patterns the UART is tested fgor functionality.

If the operator presses the lower case "s" on che keyboard, the keyboard test will be initiated. This test is a visual check of the keys on the keyboard. As each key is pressed, its key coordinates, and its upper or lower case state are displayed in the center of the display.

Example:

Lower Case "s" = Hex Code 31 or L31 for lower case

The operator must press the RESET key (unshifted) to return to the burn-in mode. When the RESET key is pressed, the burn-in resumes with the PROM checksum test.

7.2.2 LOAD PROCEDURE

The load procedure for the system code and diagnostic test is automatically accomplished by turning the 2336DW terminal power ON(1).

7.2.3 OPERATING PROCEDURES

After turning the power ON(1), the operator has several options and modes of operation to choose from.

MODE 1: Power-up for system operation

The operator will power-up the terminal. Then the diagnostic will perform its checks and pass control to the terminal microcode. The microcode will display the terminal type, baud rate and word length state.

The operator must depress the shifted RESET key to obtain control of the 2200 system.

MODE 2: Power-up and Screen alignment with abort to system operations

Power-up must be performed as in MODE 1 except special function key "13" must be depressed at power-up to obtain the alignment pattern on the screen. When the alignment has been completed, the operator must depress the special function key '15' to return to system code.

MODE 3: Power-up and Burn-in mode

Power-up is performed as in MODE 1 with all the baud rate switches, located at the lower rear of the terminal, in the ON (up) position.

MODE 4: Power-up or Burn-in with loop on error capability

Select the proper baud rate switch settings for either Power-up or Burn-in mode (section 7.2.1). If an error has been detected in Power-up or Burn-in modes and the operator wishes to loop on the error to check the signals being generated by the test in error; perform power-up as in MODE 1 then depress special function key '14'.

MODE 5: Power-up and diagnostics abort function

The operator must power-up as explained in MODE 1. When an error is detected he/she may abort the error by depressing special function key '15'. This operation should only be used if the operator determines the error will not cause fatal errors in data or operation.

7.2.4 ERROR CODE DEFINITIONS

TEST NAME	ERROR CODE	FAILING MODULE or DESCRIPTION
Z80-REG.	01	Z-80 A,I Register Failure
UART P-UP	02	UART Power-up State Failure
VINIT	03	VTAC Power-up Failure
PIOINIT	04	PIO Power-up Failure
Z-80 REG.	05	Z-80 Reg. Flag Register Failure
Z-80 REG.	06	Z-80 Reg. Foreground and Prime Failure
PROM CHECK	07	PROM Checksum Failure
RAM TEST	08	Main, Char. or Cont. RAM Failure
CTC REG.	09	CTC Reg. Read/Write Failure
CTC T/CNT	09	CTC Timer Counter Failure
CTC INT.	09	CTC Interrupt Failure
CTC HOR.	09	CTC Vert. Sweep Sync Failure
UART	10	UART Trans. Not Ready
UART	11	UART Rec. Not Ready
UART	12	Transmit Error
UART	13	Rec. Not Ready
UART	14	Receiver Error
UART	15	CTC Trans. Ready Counter Failure
UART	16	CTC Rec. Ready Counter Failure
UART	17	UART Error Set
UART	18	Overrun Cleared

7.2.5 LOOPBACK CONNECTOR

The loopback connector is a standard RS-232C male connector with the following pins wired together:

2 to 3
4 to 5
6 to 20

7.2.6 KEYBOARD COORDINATE HEX CODES

KEYCAP	CODE	KEYCAP	CODE
INDENT	01	LOCK	NO CODE
PAGE	02	SHIFT	NO CODE
CENTER	03	A	30
DEC TAB	04	S	31
FORMAT	05	D	32
MERGE	06	F	33
NOTE	07	G	34
STOP	08	H	35
SRCH	09	J	36
REPLC	0A	K	37
COPY	0B	L	38
MOVE	0C	;	39
COMMAND	0D	'	3A
ARROW	0E	RETURN	3B
Blank Key	0F	Z	40
GO TO PAGE	6E	X	41
CANCEL EDIT	6D	C	42
1	11	V	43
2	12	B	44
3	13	N	45
4	14	M	46
5	15	,	47
6	16	.	55
7	17	/	48
8	18	SPACE BAR	53
9	19	EXECUTE	2C
0	1A	INSERT	1D
-	50	PREV SCRN	1E
=	1B	DELETE	2D
BACKSPACE	54	NEXT SCRN	2E
TAB	10	UP ARROW	56
Q	20	DOWN ARROW	57
W	21	RIGHT ARROW	51
E	22	LEFT ARROW	52
R	23	ERASE	67
T	24	HALT	66
Y	25	RETURN	63
U	26	[	6C
I	27	D TAB RCALL	6B
O	28	KEYPAD 7	2F
P	29	KEYPAD 8	6A
]	2A	KEYPAD 9	69
GL	2B	KEYPAD 4	3E
KEYPAD 5	3F	KEYPAD 6	68
KEYPAD 1	4E	KEYPAD 2	4F
KEYPAD 0	4B	KEYPAD .	4D

NOTES

SECTION 8

REMOVAL AND REPLACEMENT

8.1 GENERAL

This section contains removal and replacement procedures for several major 2336DW assemblies. Before removing a particular assembly, ensure that the power switch is OFF and the ac power cord is unplugged. Remove the CRT display module cover as described in section 3.1. Refer to section 9 (Illustrated Parts Breakdown) for parts location and identification.

WARNING

Before performing any of the CRT procedures in this section, discharge the CRT anode. Even with power removed, the terminal cathode ray tube can hold a charge of several thousand volts. To eliminate the risk of accidental CRT discharge, which can result in serious injury, discharge the CRT anode as follows:

8.2 REMOVAL AND REPLACEMENT PROCEDURES

8.2.1 CRT DISCHARGE PROCEDURE

a. Attach one end of a length of insulated wire to the metal shaft of a plastic-handled, heavy-duty screwdriver.

b. Attach the other end of the wire to CHASSIS GROUND.

c. Using a non-conductive tool such as a plastic alignment tool, carefully raise the edge of the rubber anode cap high enough to insert the screwdriver.

d. Taking care not to touch the metal shaft of the screwdriver or any metal part of the terminal, discharge the CRT anode by touching the anode clip with the grounded screwdriver.

e. After discharging the CRT, remove the grounding wire and reseat the rubber anode cap.

8.2.2 7743-A PCB

Removal

a. Turn the 2336DW on its side so that the underside of the base is accessible.

b. Remove the four phillips screws and rubber feet from the base.

c. Remove the metal screen from the base, thus exposing the 7743 PCB.

d. Gently pull the 7743 PCB/Rear Panel assembly away from the base until the connectors are accessible.

e. Unplug the 9-pin power supply and 3-pin video connectors.

f. Remove the 7743 PCB/Rear Panel assembly.

Replacement

To replace the CRT Chassis Assembly, reverse the above procedure.

WARNING

```
************************************************************
*                                                          *
*    DO NOT OPEN THE SWITCHING POWER SUPPLY UNDER ANY      *
*    CIRCUMSTANCE.  EXTREMELY DANGEROUS VOLTAGE AND        *
*    CURRENT LEVELS (IN EXCESS OF 300 VOLTS DC AND UN-     *
*    LIMITED CURRENT) ARE PRESENT WITHIN THE POWER SUPPLY. *
*                                                          *
*    DO NOT ATTEMPT TO REPAIR THE SWITCHING POWER          *
*    SUPPLY; IT IS FIELD REPLACEABLE ONLY.                 *
*                                                          *
*    AFTER POWERING THE UNIT DOWN AND DISCONNECTING THE AC *
*    POWER PLUG FROM THE WALL OUTLET, ALLOW ONE MINUTE     *
*    BEFORE REMOVING THE POWER SUPPLY TO PROVIDE ADEQUATE  *
*    TIME FOR ANY RESIDUAL VOLTAGE TO DRAIN THROUGH THE    *
*    BLEEDER RESISTORS.                                    *
*                                                          *
************************************************************
```

8.2.3 SWITCHING POWER SUPPLY

Removal

a. Unplug the 8-pin power output connector from the top of the switching power supply.

b. Unplug the 2-pin CRT power connector from the top of the switching power supply.

c. Disconnect the two top internal AC input wires (blue and brown) from the AC switch.

d. Remove the three philips screws, washers and posts that secure the power supply to the CRT chassis assembly.

e. Remove the power supply.

Replacement

To replace the power supply, reverse the above procedure.

8.2.4 CRT CHASSIS ASSEMBLY

Removal

a. Follow the procedures described in section 5.2.2 to remove the switching power supply.

b. Remove the two (3/16")hex head mounting screws and washers that secure the rear of CRT to the support posts. Loosen the two (3/16") hex head screws and washers that secure the front of the CRT to the support posts.

c. Slide the chassis (1/4") forward; lift chassis out of terminal and place on a flat surface.

d. Take off the CRT bezel by removing the four mounting screws (two on each side).

Replacement

To replace the CRT Chassis Assembly, reverse the above procedure.

8.2.5 CRT REAR PANEL ASSEMBLY

Removal

a. Remove the two 1/4-inch nuts and washers that secure the rear panel to the CRT chassis.

b. Remove the black grounding wire.

c. Remove the rear panel.

Replacement

To replace the CRT rear panel assembly, reverse the above procedures.

8.2.6 7456 CRT ELECTRONICS PCB

Removal

a. Remove two screws, one from each side of front base plate.

b. Grasp the CRT 7456 PCB and remove it from the CRT chassis.

Replacement

To replace the CRT PCB, reverse the above procedure.

NOTES

SECTION 9

ILLUSTRATED PARTS BREAKDOWN

9.1 INTRODUCTION

This section contains the illustrated parts breakdown for the 2336DW terminal. Use this IPB to identify parts during removal/replacement, alignment, adjustment, when troubleshooting or performing PM, or when ordering parts. The chart below shows the title and parts list page number for each sub-assembly in this section. The PCB parts breakdown is located in appendix C (schematics). Each schematic contains its own component layout and part number listing.

The locator on pages 9-2 and 9-3 provides a quick method for identifying sub-assemblies.

NOTE

Items that are included on the RSL are highlighted with an asterisk (*) in the IPB.

SUB-ASSEMBLY	PAGE NUMBER
2336 PARTS LOCATOR	9-2
CRT Assembly	9-4
PCB Rear Panel	9-6
AC Rear Panel	9-8
Base	9-10
Cover	9-12
Bezel	9-14
Power Supply	9-16
Other	9-18

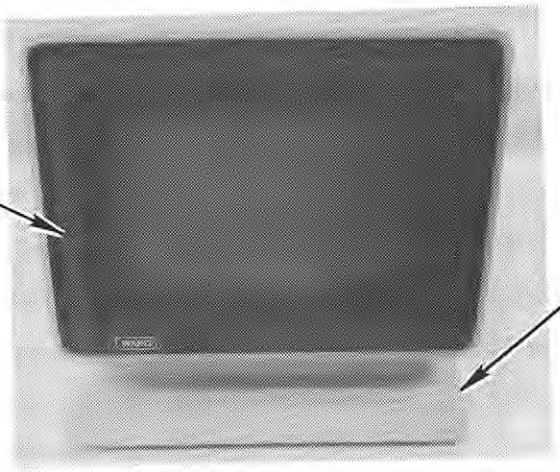

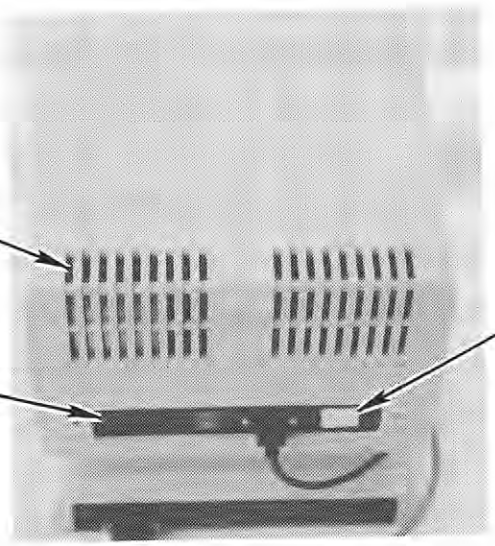

2336 PARTS LOCATOR

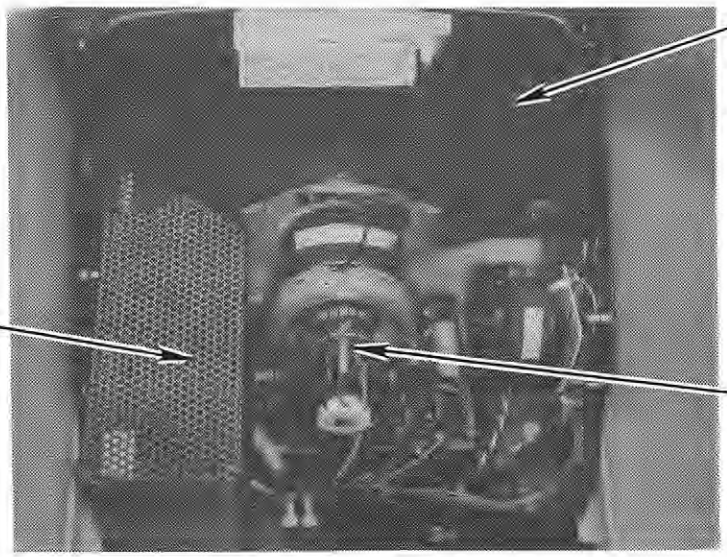

OTHER COMPONENTS - PAGE 9-18

2336 PARTS LOCATOR

CRT ASSEMBLY(270-0755)

NOTE

Components of the CRT assembly not called out on the list below, are shown under the heading Hardware Not Shown.

LOCATION	PART NUMBER	DESCRIPTION
	270-0633	Monitor and Frame *
1	340-0108	12"CRT *
2	210-7456	PCA 12" Mon. Elec.
3	451-5055	Bracket, connector
4	452-2198	Plate,LH CRT Chassis
5	452-2199	Plate,RH CRT Chassis
6	458-1043	Support,CRT
7	350-2073	Anode Connector
8	270-3177	Flyback Trans. Harn.
9	220-1580	Wire & Lug Assemb.
10	270-3092	Yoke Assemb. 12" Mon
11	270-3171	CRT Harn. Assemb.
12	380-3011	Diode,Rect., 20KV
13	449-0499	Bushing
14	449-0500	Spacer
15	449-0501	Rack, detent
16	452-0210	Plate,Spacer Adj.
17	465-1643	Spring,grounding
18	465-1755	Extension spring
19	465-1756	Spring,plunger
20	452-4125	Guide,card
21	462-0023	Spacer
22	650-2081	SCR4-40x1/4Phil,FHD.
23	651-0037	SCR#8x3/8,HX,HD,ST
24	651-0053	SCR,TRAP#10x3/8,HXHD
25	651-0054	SCR,#4-24x1/2,HXHD
26	652-3004	Nut 6-32,Hex,SM,SS
27	653-3001	Washer#6 .150x.288
28	653-6001	Washer#10
	HARDWARE NOT SHOWN	
RFI Plate	650-3129	SCR 6-32x3/8 Whiz
	458-1171	RF Plate
RFI Plate	652-0032	Nut #6
	452-2700	Clips, Hold-down
H.D. Clip	651-0037	SCR 8x3/8 Self-tap
	449-0367	Knobs, Adjustment
Knob,Adj.	650-2043	SCR 4-4-x3/8 Set

THE INFORMATION CONTAINED IN THIS DRAWING IS THE PROPERTY OF WANG LABORATORIES, INC., AND IS CONFIDENTIAL AND PROPRIETARY TO WANG LABORATORIES, INC. IT MAY NOT BE COPIED, REPRODUCED OR USED IN WHOLE OR IN PART FOR ANY REASON.

MILLIMETERS IN PARENTHESIS. TOLERANCES TO BE EQUIVALENT TO INCH DIMENSIONS.

DO NOT SCALE

NOTE:
1) SET BALL PLUNGER (ITEM 19) PRESSURE TO INSURE THAT VERTICAL BREAKAWAY FORCE IS 1.50 ± .25 LBS. AT DESIGNATED HOLE WHEN TUBE IS IN EXTREME REAR-TILT POSITION (AS INDICATED BY ARROW DIRECTION).

HOLE LEGEND & TOLERANCES	
HOLE DIA	TOLERANCE
.0135 - .125	+ .003 - .001
.126 - .250	+ .004 - .001
.251 - .500	+ .005 - .001

SYM	DESCRIPTION	QTY.
A		

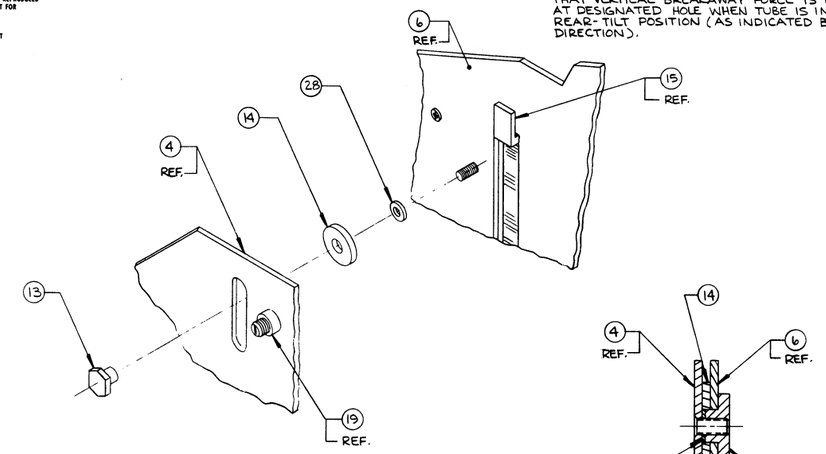

DETAIL "A"
TYP. 2 PL

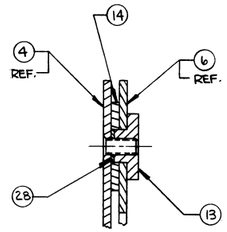

PARTIAL SECTION B-B
TYP. 2 PL
SCALE: 2X

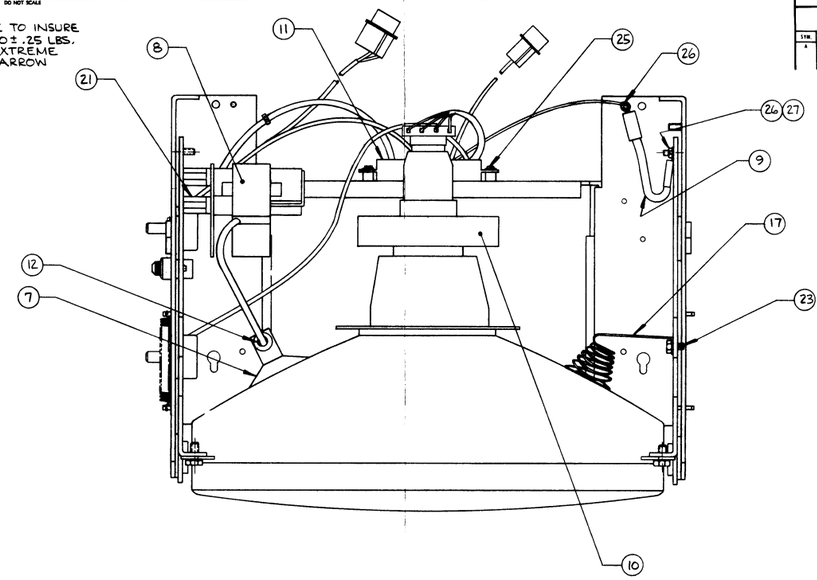

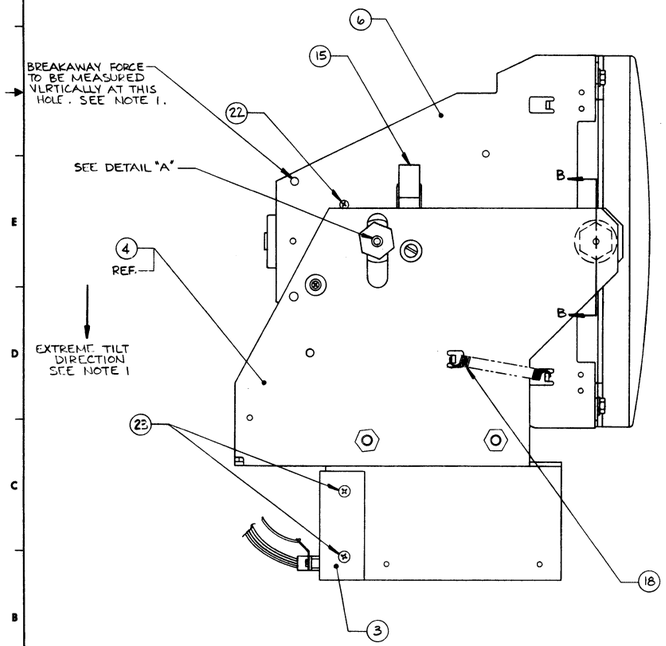

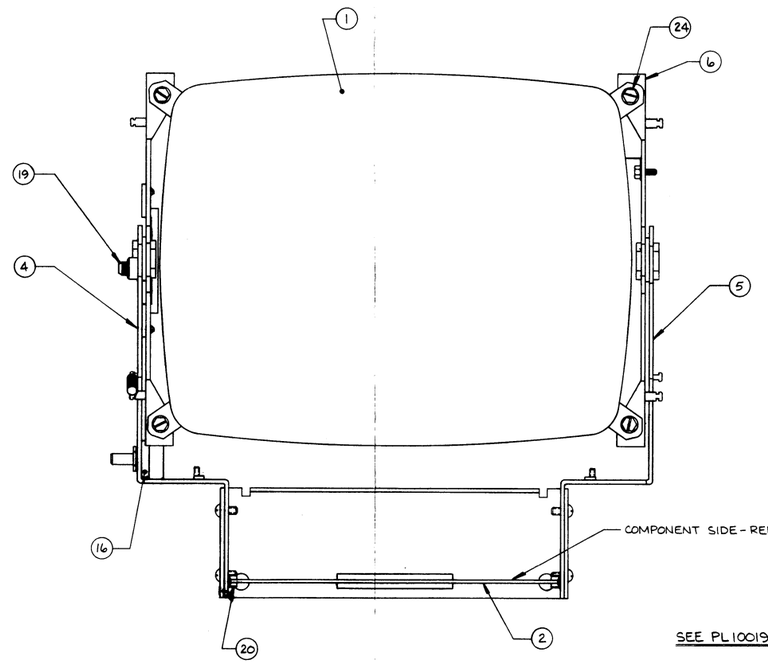

SEE PL10019-0101

QTY	ITEM	WANG PART NO.	DRAWING NO.	DESCRIPTION
NEXT ASSY.				

WANG LABORATORIES, INC. LOWELL, MASS. U.S.A.

MATERIAL —

FINISH —

MODEL NO. MVP/ERGO II

SEE ENGRG SPECIFICATIONS No. ES-1001

TOL. EX. AS NOTED
XX ± .010 FRAC. ± 1/64
XXX ± .005 ANG. ± 1°30' FINISH √125

SCALE FULL SHT 1 OF 1

	BY	DATE	APPROVED BY	DATE
DWN	D. CLOUGH	3/31/81	E ENGR	
CHK		5-1-81	M ENGR	5-1-81
QTY/1			MFG ENGR	5-7-81

TITLE MONITOR & FRAME ASSY, (TILTING)

WANG PART NUMBER	SIZE	DRAWING NUMBER	REV.
270-0633	E	10019-0101	0

REV.	DESCRIPTION	DATE
A	ECO/PCR PMP-A/1744	5-7-81

1000-6000 E

PCB REAR PANEL (270-0753)

NOTE

Components of the PCB rear panel assembly not called out on the list below,are shown under the heading Hardware Not Shown.

LOCATION	PART NUMBER	DESCRIPTION
1	452-2287	Panel, Logic Board
2	451-4981	Bracket, Mounting
	HARDWARE NOT SHOWN	
	654-0530	Terminal, Lug, Male
	651-0478	Rivet, Domed, Pull
KB/Print	651-0027	SCR, 4x3/8, Self Tap
RS-232	650-2120	SCR, 4-40x3/8 Pan Hd.
RS-232	652-2005	Nut, #4
	462-0518	Spacer, Stand Off

THE INFORMATION CONTAINED IN THIS DRAWING IS THE PROPERTY OF WANG LABORATORIES, INC., AND IS CONFIDENTIAL AND PROPRIETARY TO WANG LABORATORIES, INC.. IT MAY NOT BE COPIED, REPRODUCED OR USED IN WHOLE OR IN PART FOR ANY REASON.

MILLIMETERS IN PARENTHESIS. TOLERANCES TO BE EQUIVALENT TO INCH DIMENSIONS.

DO NOT SCALE

HOLE LEGEND & TOLERANCES		
HOLE DIA	TOLERANCE	
.0135 - .125	+ .003 - .001	
.126 - .250	+ .004 - .001	
.251 - .500	+ .005 - .001	
SYM.	DESCRIPTION	QTY.
A		

NOTES:

1. DEBURR & BREAK ALL SHARP EDGES.
2. INSIDE BEND RAD. TO BE .06 UNLESS OTHERWISE SPECIFIED.
3. NOMENCLATURE TO BE 10 PT (.10 HIGH) HELVETICA REGULAR, UPPER CASE LETTERING CENTERED ON ℄'S SHOWN, SILKSCREEN WANG OYSTER WHITE.

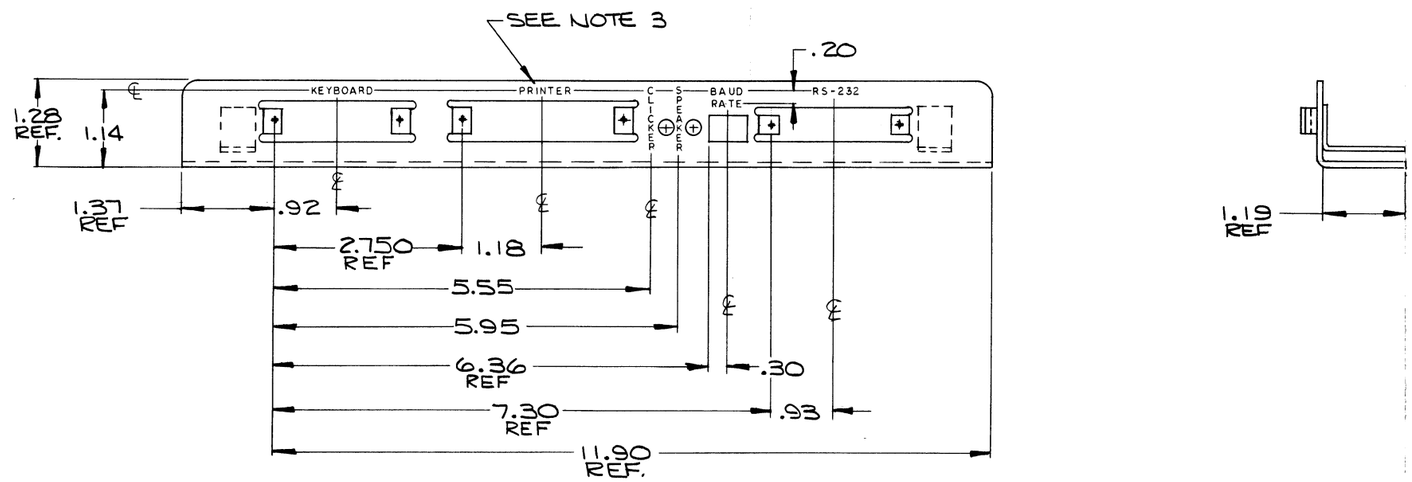

QTY.	ITEM	WANG PART NO.	DRAWING NO.	DESCRIPTION
2	2	"	"	BRKT, PANEL
1	1	"	"	PANEL, LOGIC BOARD

NEXT ASSY.

WANG LABORATORIES, INC. LOWELL, MASS. U.S.A.

BY	DATE	APPROVED BY	DATE
DWN J. Hahn	3-4-82	E ENGR	
CHK [signature]	3/4/82	M ENGR [signature]	3-4-82
QTY 1		MFG ENGR	

MATERIAL: SEE SHT 2

MODEL NO.: LOW COST DW

SEE ENGRG. SPECIFICATIONS No. ES-1001

TITLE: PANEL, LOGIC BOARD (SILKSCREEN)

FINISH: BLACK ZINC (CONDUCTIVE)

TOL. EX. AS NOTED: .XX ± .010 FRAC. ± 1/64; .XXX ± .005 ANG ± 1°30' FINISH 128

SCALE 1:1 SHT 1 OF 2

WANG PART NUMBER	SIZE	DRAWING NUMBER	REV.
452-2287-XA	D	10101-5006	A

NO.	REVISION	DATE	BY
A	GEN PER DWR #2474		

9005-10101 D

A.C. REAR PANEL (270-0754)

NOTE

Components of the A.C. rear panel assembly not called out on the list below,are shown under the heading Hardware Not Shown.

LOCATION	PART NUMBER	DESCRIPTION
1	451-3164	Panel, A.C.
	HARDWARE NOT SHOWN	
	325-0059	Switch, Rocker
	220-1755	Cable, A.C. Recep.
	220-1828	Cable, A.C. Switch
	650-3120	SCR, 6-32x3/8
	652-0032	Nut, #6

THE INFORMATION CONTAINED IN THIS DRAWING IS THE PROPERTY OF WANG LABORATORIES, INC., AND IS CONFIDENTIAL AND PROPRIETARY TO WANG LABORATORIES, INC.. IT MAY NOT BE COPIED, REPRODUCED OR USED IN WHOLE OR IN PART FOR ANY REASON.

MILLIMETERS IN PARENTHESIS.
TOLERANCES TO BE EQUIVALENT TO INCH DIMENSIONS.

DO NOT SCALE

NOTES:
1. DEBURR & BREAK ALL SHARP EDGES.
2. INSIDE BEND RAD. TO BE .06.

HOLE LEGEND & TOLERANCES		
HOLE DIA	TOLERANCE	
.0135 - .125	+ .003 - .001	
.126 - .250	+ .004 - .001	
.251 - .500	+ .005 - .001	
SYM.	DESCRIPTION	QTY.
A	.187 DIA.	2
B	.137 +.003 -.000 DIA.	1
C	.169 DIA.	2
D	.187 +.003 -.000 DIA	2
E	.187 DIA THRU C'SK 100° TO .290 DIA.	2

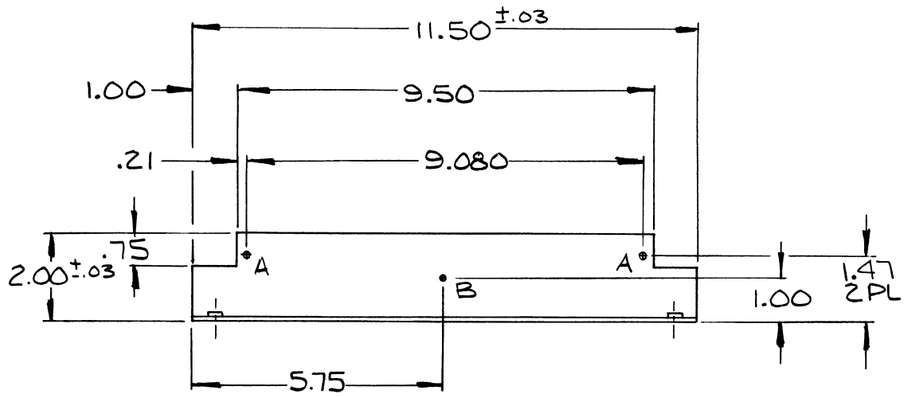

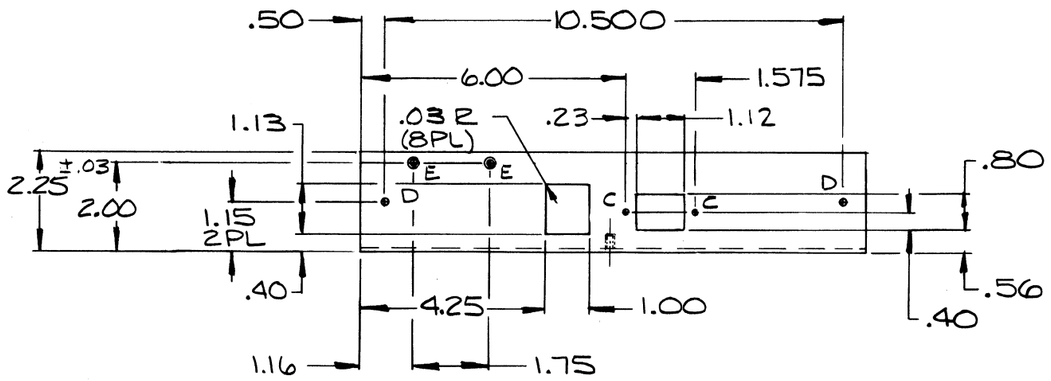

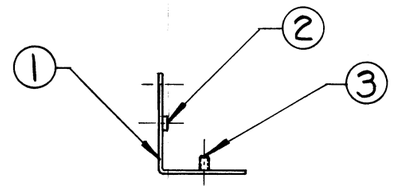

QTY.	ITEM	WANG PART NO.	DRAWING NO.	DESCRIPTION
1	3	651-1048		STUD, CLINCH, PEM #FH-632-621 (SEE "B" HOLE)
2	2	652-0091		NUT, CLINCH, PEM #S-632-221 (SEE "D" HOLES)
1	1			PANEL, A.C.

NEXT ASSY.

WANG LABORATORIES, INC. LOWELL, MASS. U.S.A.

	BY	DATE	APPROVED BY	DATE
DWN	V. B. Z.	2-4-82	E ENGR	
CHK	Brigham	2-12-82	M ENGR	3-4-82
QTY.	1		MFG ENGR	

MATERIAL: .06 THK CRS 1018
MODEL NO.: LOW COST DW
SEE ENGRG SPECIFICATIONS No. ES-1001
FINISH: BLACK ZINC (CONDUCTIVE)
TOL EX AS NOTED: XX ±.010 FRAC ± 1/64; XXX ±.005 ANG ± 1°30'; FINISH 125
SCALE: 1/2 SHT OF

TITLE: PANEL, A.C.

WANG PART NUMBER	SIZE	DRAWING NUMBER	REV
451-3161-XA	C	10101-5005	A

5005-10101 D

REVISION	BY	DATE
GEN PER DWG #2474		2-8-82

OGILVIE PRESS

BASE (449-0605)

NOTE

Components of the base assembly not called out on the list below, are shown under the heading Hardware Not Shown.

LOCATION	PART NUMBER	DESCRIPTION
	HARDWARE NOT SHOWN	
	449-0605	Base, CRT
Base	220-1827	Cable, Video Ext.
Base	458-2034	Screen, Base
Base	655-0202	Feet, Base
Base	650-4160	SCR, 8-32x1/2

THE INFORMATION CONTAINED IN THIS DRAWING IS THE PROPERTY OF WANG LABORATORIES, INC., AND IS CONFIDENTIAL AND PROPRIETARY TO WANG LABORATORIES, INC. IT MAY NOT BE COPIED, REPRODUCED OR USED IN WHOLE OR IN PART FOR ANY REASON.

MILLIMETERS IN PARENTHESIS. TOLERANCES TO BE EQUIVALENT TO INCH DIMENSIONS.

DO NOT SCALE

HOLE LEGEND & TOLERANCES	
HOLE DIA.	TOLERANCE
.0135 - .125	+ .003 - .001
.126 - .250	+ .004 - .001
.251 - .500	+ .005 - .001

STN	DESCRIPTION	QTY
A		

NOTES:

1. MATERIAL TO BE GENERAL ELECTRIC NORYL FN-215 THERMOPLASTIC RESIN, CUSTOM COLOR PER WANG CHIP SUPPLIED.
2. PAINT EXTERIOR SURFACES ONLY, WANG OYSTER WHITE PER WANG SPEC 10-200 AND MUNSELL COLOR STANDARD #10Y 8/1 (2) TWO COATS OF SEMI-GLOSS POLYURETHANE AND (1) ONE FINAL COAT OF MEDIUM TEXTURE, OVERSPRAY PERMISSIBLE.
3. TYPICAL WALL THICKNESS TO BE .25, UNLESS OTHERWISE SPECIFIED.
4. TYPICAL DRAFT ANGLE TO BE 1°, UNLESS OTHERWISE SPECIFIED.
5. LOCATE WANG PART Nº APPROX. WHERE SHOWN USING .25 HIGH CHARACTERS RAISED .03 FROM SURFACE.

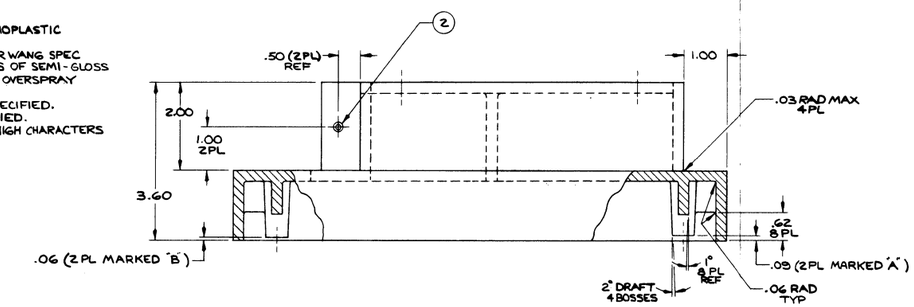

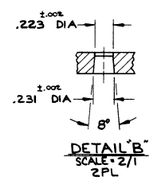

DETAIL "B"
SCALE = 2/1
2PL

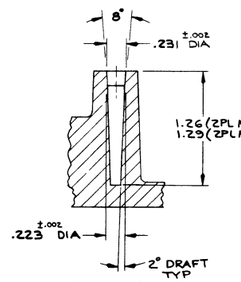

SECTION A-A
SCALE = 2/1
TYP 4 PL

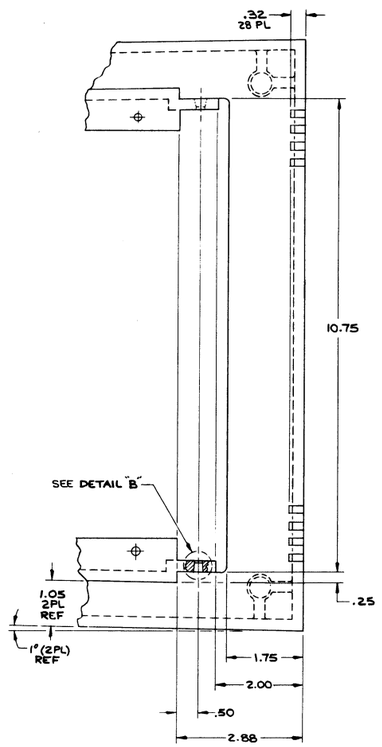

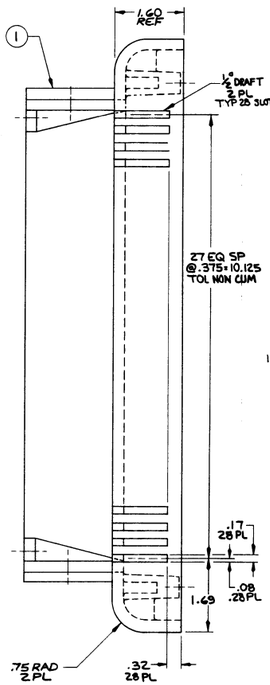

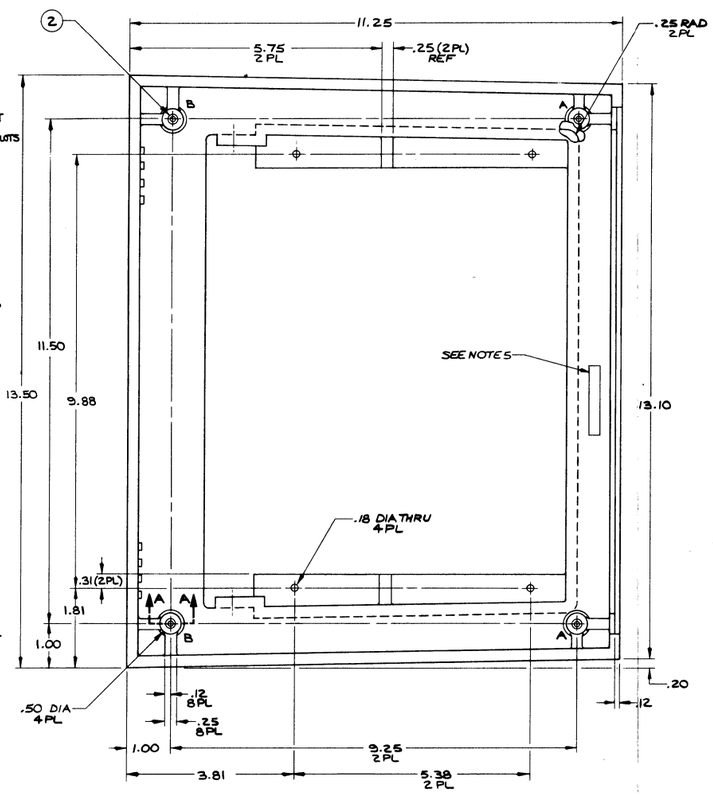

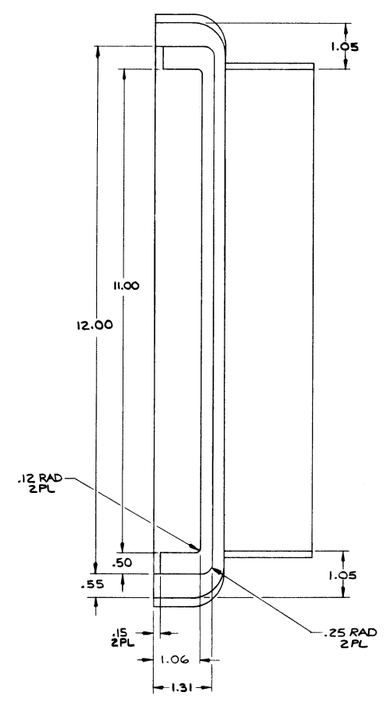

QTY.	ITEM	WANG PART NO.	DRAWING NO.	DESCRIPTION
6	2	652-0123		ULTRASERT, DODGE 6035-2BRX.185
1	1			BASE, CRT

NEXT ASSY

WANG LABORATORIES, INC. LOWELL, MASS. U.S.A.

BY	DATE	APPROVED BY	DATE
DWN [illegible]	1-11-82	E ENGR	
CHK [illegible]	1-11-82	M ENGR	3-10-82
QTY 1		MFG ENGR	

MATERIAL: SEE NOTE 1

MODEL NO. 2236 DW

COMPLETE SET ENGR SPECIFICATIONS No. ES-1001

FINISH: SEE NOTE 2

TOL EX. AS NOTED .XX ± .010 FRAC ± 1/64 .XXX ± .005 ANG ± 1° 30' FINISH 125

SCALE 1/2 WT QT

TITLE: BASE, CRT

449-0605-XA | E | 10101-5003 | A

WANG PART NUMBER | SIZE | DRAWING NUMBER | REV

REVISION	BY	DATE
A	CSM PROT RUN RELEASE	1/82

10101-5003 E

COVER (449-0371)

NOTE

Components of the cover assembly not called out on the list below, are shown under the heading Hardware Not Shown.

LOCATION	PART NUMBER	DESCRIPTION
	HARDWARE NOT SHOWN	
	449-0613	Cover, Front
	449-0371	Cover, CRT
Cover CRT	650-3160	SCR, 6-32x1/2
Cvr Base	650-4243	SCR, 8-32x3/4

THE INFORMATION CONTAINED IN THIS DRAWING IS THE PROPERTY OF WANG LABORATORIES, INC., AND IS CONFIDENTIAL AND PROPRIETARY TO WANG LABORATORIES, INC. IT MAY NOT BE COPIED, REPRODUCED OR USED IN WHOLE OR IN PART FOR ANY REASON.

DIMENSIONS IN PARENTHESIS, TOLERANCES TO BE EQUIVALENT TO INCH DIMENSIONS.

DO NOT SCALE

NOTES:

1. MAT'L: NORYL FN 215 (GENERAL ELECTRIC) THERMOPLASTIC RESIN. COLOR PER WANG COLOR CHIP SUPPLIED
2. WALL THICKNESS TO BE .25 UNLESS OTHERWISE SPECIFIED
3. MARK WANG PART Nº APPROX AS SHOWN USING .25 HIGH RAISED CHARACTERS
4. PAINT EXTERIOR E/INDICATED SURFACES WANG OYSTER WHITE PER WANG SPEC 10-200 & MUNSELL COLOR STANDARD #IDY 8/1 (2) TWO COATS SEMI-GLOSS POLYURETHANE AND (1) ONE COAT OF MEDIUM TEXTURE OVERSPARY PERMISSIBLE.
5. ULTRASONICALLY OR SOLVENT BOND CLIP TO COVER AS SHOWN.

HOLE LEGEND & TOLERANCES

HOLE DIA.	TOLERANCE
.033 - .123	+ .002 - .004
.124 - .250	+ .004 - .000
.251 - .500	+ .005 - .000

SYM.	DESCRIPTION	QTY.
2	.180 DIA. - .312 CBORE X .12 DP	2

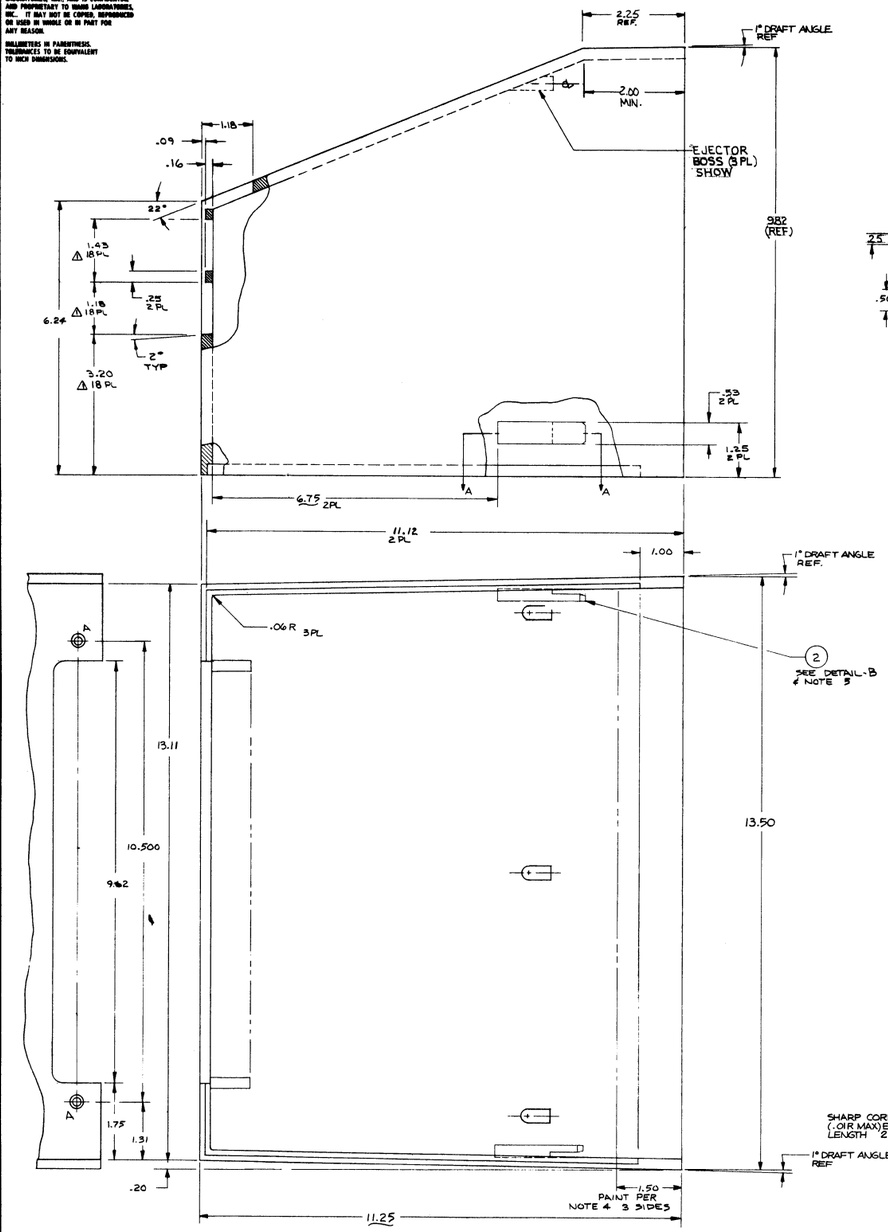

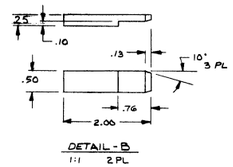

DETAIL-B
1:1 2 PL

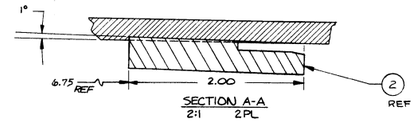

SECTION A-A
2:1 2 PL

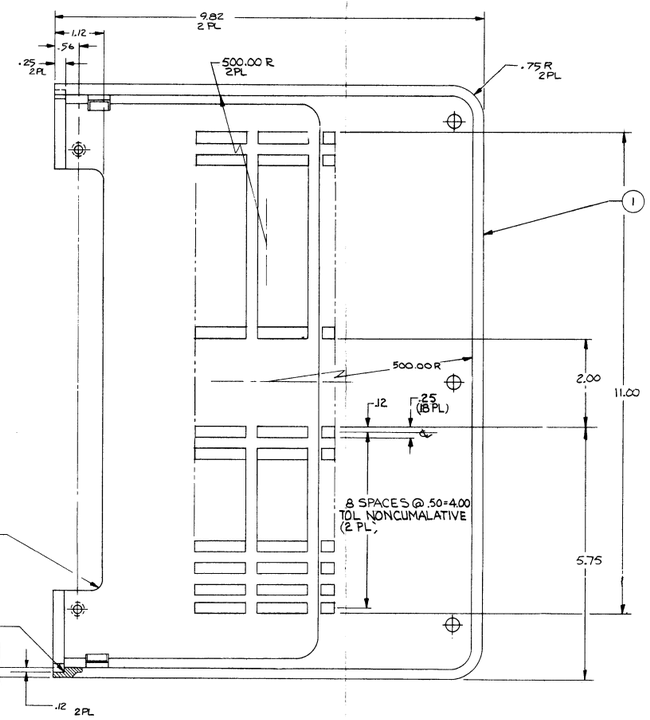

REVISION	BY	DATE	APPROVED
A	GREY PROT. DOOR (1.00±)		
B	REVISED ECO#11233 E.O. 5 DEC. 1980		
C	REVISED ECO#11976 E.O. 2 JAN. 1981		
D	REVISED ECO#12076 E.O. 2 JULY 1981		

QTY.	ITEM	WANG PART NO.	DRAWING NO.	DESCRIPTION
2	2	—	—	CLIP
1	1	—	—	COVER, CRT

NEXT ASSY.

WANG LABORATORIES, INC. LOWELL, MASS. U.S.A.

MATERIAL: SEE NOTE 1

FINISH: SEE NOTE 2

MODEL NO. MINI-WORD PROCESSOR

SEE ENGR. SPECIFICATIONS No. ES 1001

TOL. EX. AS NOTED
XX ± .010 FRAC ± 1/64
XXX ± .005 ANG ± 1°30' FINISH

SCALE 1/1 SHT 1 OF 1

BY	DATE	APPROVED BY	DATE
DRAWN Grey Hill	1 DEC 81	CHECKED	
ENGR Chris Lee	2 DEC 81	M ENGR NB	4/2/82
QTY. 1		MFG ENGR	

TITLE: COVER, CRT

WANG PART NUMBER	SIZE	DRAWING NUMBER	REV.
449-0371	E	06896-5023	1

06896-5023 E

BEZEL (449-0612)

NOTE

Components of the bezel assembly not called out on the list below, are shown under the heading Hardware Not Shown.

LOCATION	PART NUMBER	DESCRIPTION
	HARDWARE NOT SHOWN	
	449-0612	Bezel, 12" CRT
	449-0516	Logo Plate
	452-2674	Bezel, Clamps
Bez Clamp	651-0010	SCR, 6x3/4

A.F. 8845C
THE INFORMATION CONTAINED IN THIS DRAWING IS THE PROPERTY OF WANG LABORATORIES, INC., AND IS CONFIDENTIAL AND PROPRIETARY TO WANG LABORATORIES, INC.. IT MAY NOT BE COPIED, REPRODUCED OR USED IN WHOLE OR IN PART FOR ANY REASON.

MILLIMETERS IN PARENTHESIS.
TOLERANCES TO BE EQUIVALENT TO INCH DIMENSIONS.

DO NOT SCALE

NOTES:
1. MAT'L : MAKE FROM WPN# 449-0370, DWG NO. E06894-5039.
2. PAINT MACHINED AREA PER WANG SPEC 10-200 USING CHARCOAL GREEN PER MUNSELL 10G 3.13/ 0.5 E(1) ONE FINAL COAT OF MEDIUM TEXTURE, OVERSPRAY PERMISSIBLE.

HOLE LEGEND & TOLERANCES	
HOLE DIA	TOLERANCE
.0135 - .125	+ .003 - .001
.126 - .250	+ .004 - .001
.251 - .500	+ .005 - .001

SYM.	DESCRIPTION	QTY.
A		

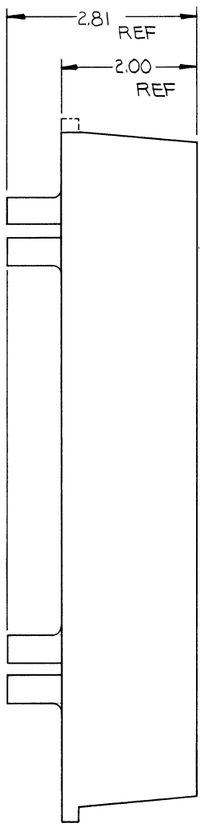

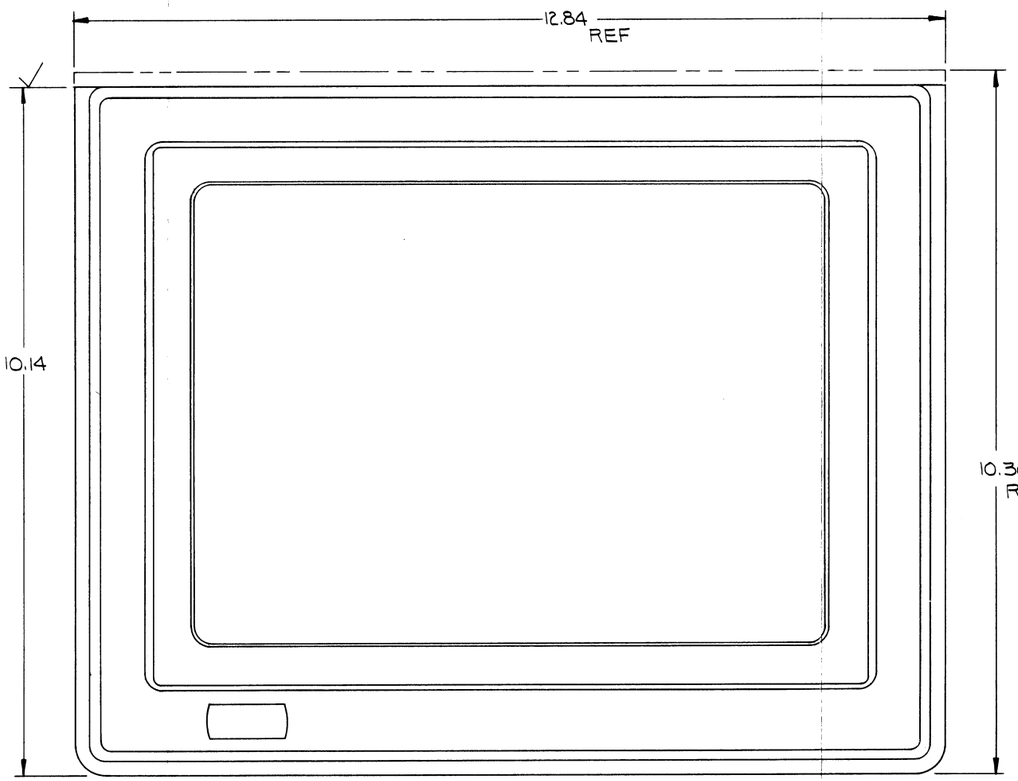

QTY.	ITEM	WANG PART NO.	DRAWING NO.	DESCRIPTION
NEXT ASSY.				

WANG LABORATORIES, INC. LOWELL, MASS. U.S.A.

BY	DATE	APPROVED BY	DATE
DWN HUDGINS	3/26/82	E ENGR	
CHK [illegible]	4-2-82	M ENGR [illegible]	4-7-82
QTY/1		MFG ENGR	

MATERIAL: SEE NOTE 1
MODEL NO.: LOW COST DW
SEE ENGR. SPECIFICATIONS No. ES-1001
TITLE: BEZEL, 12" CRT
FINISH: SEE NOTE 2
TOL EX AS NOTED XX ± .010 FRAC ± 1/64 XXX ± .005 ANG ± 1°30' FINISH 125
SCALE 1 SHT 1 OF 1
449-0612-XA | D | 10101-5014 | A
WANG PART NUMBER | SIZE | DRAWING NUMBER | REV.

NO.	REVISION	BY	DATE
A	GEN PER DWR M2569		

10101-5014 D

SWITCHING POWER SUPPLY (270-0734)

LOCATION	PART NUMBER	DESCRIPTION
	270-0734	Power Supply *

WARNING

```
**************************************************************
*                                                            *
*    DO NOT OPEN THE SWITCHING POWER SUPPLY UNDER ANY        *
*    CIRCUMSTANCE.  EXTREMELY DANGEROUS VOLTAGE AND          *
*    CURRENT LEVELS (IN EXCESS OF 300 VOLTS DC AND UN-       *
*    LIMITED CURRENT) ARE PRESENT WITHIN THE POWER SUPPLY.   *
*                                                            *
*    DO NOT ATTEMPT TO REPAIR THE SWITCHING POWER            *
*    SUPPLY; IT IS FIELD REPLACEABLE ONLY.                   *
*                                                            *
*    AFTER POWERING THE UNIT DOWN AND DISCONNECTING THE AC   *
*    POWER PLUG FROM THE WALL OUTLET, ALLOW ONE MINUTE       *
*    BEFORE REMOVING THE POWER SUPPLY TO PROVIDE ADEQUATE    *
*    TIME FOR ANY RESIDUAL VOLTAGE TO DRAIN THROUGH THE      *
*    BLEEDER RESISTORS.                                      *
*                                                            *
**************************************************************
```

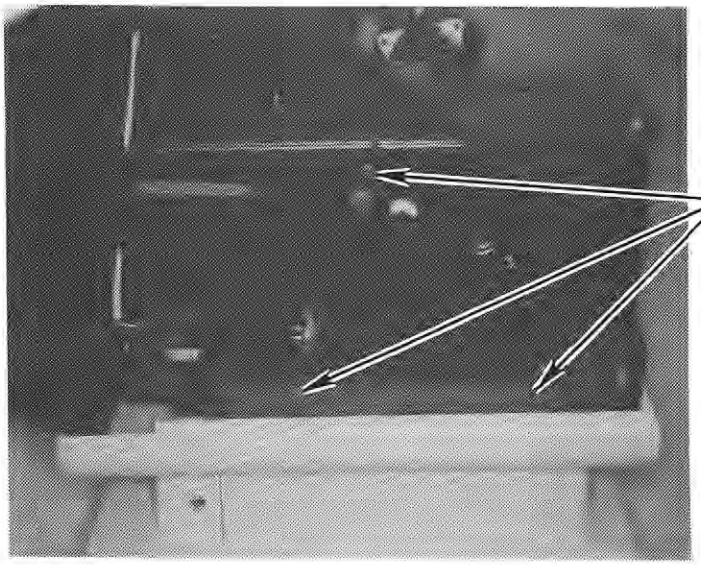
POWER SUPPLY
SUPPORT SCREWS

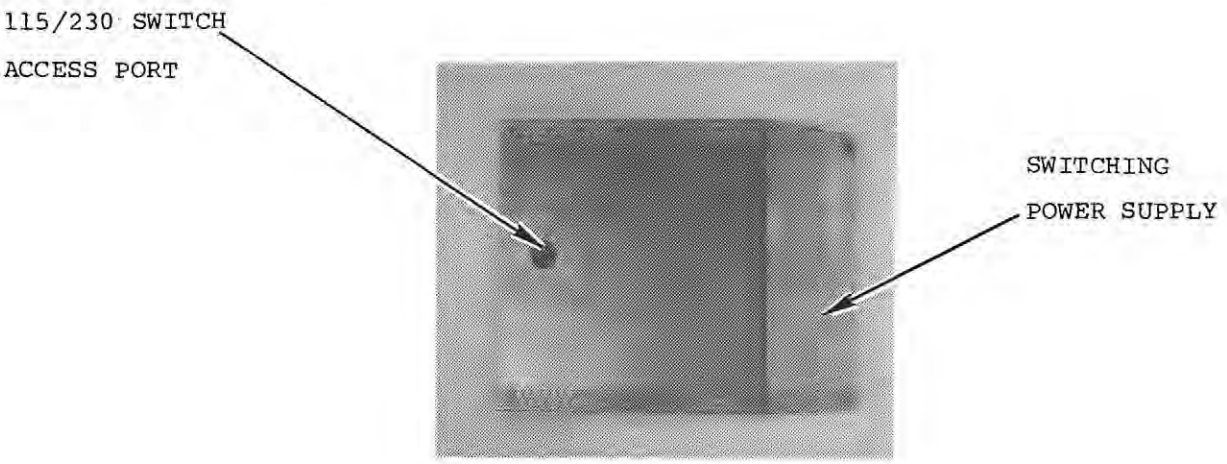
115/230 SWITCH
ACCESS PORT
SWITCHING
POWER SUPPLY

OTHER COMPONENTS

LOCATION	PART NUMBER	DESCRIPTION
	449-0614	Pan, CRT
Pan/Base	650-3167	SCR, 6-32x1/2 Whiz
CRT/Pan	650-3088	SCR, 6-32x1/4 Whiz
	220-1829	Cable Assy, DC
CRT/Panel	652-0032	Nut, #6
	420-1025	Cord, AC Line
	615-1671	Label, Model #
	290-0050	Package, Shipping

NOTES

APPENDIX A

TERMINAL/CPU CABLES

One 8-ft (2.4-m) cable to power source. One 25-ft (7.6-m) direct connection cable is provided with each Model 2336DW, unless an optional direct connection cable is ordered for a terminal. Nonextendable cables are available optionally for direct connection up to 2000 ft (606.1 m). as described below.

Length in Feet	Length in Meters	Part Number
25	7.6	120-2236-25
50	15.2	120-2236-50
100	30.3	120-2236-1
200	60.6	120-2236-2
300	90.9	120-2236-3
400	121.5	120-2236-4
500	151.5	120-2236-5
600	181.8	120-2236-6
700	212.1	120-2236-7
800	242.4	120-2236-8
900	272.7	120-2236-9
1000	303.0	120-2236-10
1250	378.8	120-2236-11
1500	454.5	120-2236-12
1750	530.3	120-2236-13
2000	606.1	120-2236-14

Modem cables are available optionally in lengths of 12 ft (3.7 m), with extensions of 25 ft (7.6 m) and 50 ft (15.2 m). (Refer to Table 9-2) Combined cable distance however, from Wang equipment to a modem is 50 ft (15.2 m) maximum according to Electronics Industries Association (EIA) standards.

Length in Feet	Length in Meters	Part Number
12	3.7	120-2227-12
25	7.6	220-0219
50	15.2	220-0220

APPENDIX B

RECOMMENDED SPARES

Wang Part Number	OEM Part Number	Description	Comments
210-7743-A		PCA 2336DW Single Bd.	
270-0633		12 in. Monitor Assy Tilting	
340-0108		CRT	
210-7456		PCA 12 in. Monitor Electronics	
725-2637		Standard Keyboard DW	
725-2652		Expanded Keyboard DW	
*270-0753		LD COST DW PCA REAR PANEL ASS'Y (INCLUDES 210-7743A)	
270-0734		POWER SUPPLY	
220-1246		KEYBOARD CABLE	
~~378-2054~~		~~UK PROM FOR 2336 DW NEEDED FOR STERLING SYMBOL~~ (ALPHA O/C 6)	
270-0817		DE BOARD L10 = 378-6079	
270-0752		DW BOARD L10 = 378-6014	
725-2618		STANDARD DE KYBRD	

ORDER THIS

APPENDIX C

SCHEMATICS

"THIS DRAWING AND THE DATA SHOWN THEREON ARE THE CONFIDENTIAL PROPERTY OF, AND ARE PROPRIETARY TO, WANG LABORATORIES, INC. THIS DRAWING AND THE DATA SHOWN THEREON MAY NOT BE MADE PUBLIC WITHOUT THE WRITTEN CONSENT OF WANG LABORATORIES, INC. IF FOR ANY REASON THIS DRAWING IS PERMITTED BY WANG TO LEAVE THE PHYSICAL CUSTODY OF THE COMPANY, IT IS RETURNABLE UPON THE DEMAND OF WANG LABORATORIES, INC."

DO NOT SCALE

17.4MHZ (2G8, 2B11, 2F5)

Y1 17.4MHZ

R6 270Ω R5 270Ω C11 .01uf

L12 504 L12 504 L12 504

17.4MHZ (2D5, 3G3)

L24 393 ICLR

R3 330Ω R4 10Ω Q1 SPS6551 R2 1K R9 2.2K 5% L12 504 L28 504

+5VR

J1 P1

L24 393 PS CLK (3C2)

L25 LS11 19200 (3D11)

Ø (3D6)

+5VR

R16 10K D1 SIL

C30 33uf 10V ±0V(T)

L73 14

POR (2E6, 3D11)

POR (2B11, 3B9) (3B3, 3D3) (3E2, 3F6)

RESET

R29 330Ω +5VR

WAIT (1B1) WAIT

R11 4.7K +5VR BUSRQ

R13 4.7K +5VR NMI

BUSAK

HALT

INT (3D4) R14 4.7K +5VR INT

L33 Z80 CPU

CLK WAIT BUSRQ NMI BUSAK HALT INT MREQ IORQ RD WR M1 RFSH VCC GND ±0V

A7 A5 A3 A1 A0 A2 A4 A6 A10 A9 A8 A14 A15 A13 A12 A11

SJ15 (1A9)

L32 LS244 BAB7 BAB5 BAB3 BABI BAB0 BABZ BAB4 BAB6

L34 LS244 BAB10 BAB9 BAB8 BAB14 BAB15 BAB13 BAB12 BAB11

L43 LS245 DB0 DB1 DBZ DB3 DB4 DB5 DB6 DB7 BDB0 BDB1 BDB2 BDB3 BDB4 BDB5 BDB6 BDB7

L61 32

L44 367 MREQ IORQ RD WR M1 RFSH

IORQ (3D6) RD (3D10, 3D6, 1C3) WR (1C3, 1F5, 3C11) M1 (3D6)

L40 04

SJ15 (1F10) J10 P

+5VR

L9 2732 BABO BABI BABZ BAB3 BAB4 BAB5 BAB6 BAB7 BAB8 BAB9 BABIO BABII BABI2 BDB0 BDB1 BDB2 BDB3 BDB4 BDB5 BDB6 BDB7

L10 2732 BABO BABI BABZ BAB3 BAB4 BAB5 BAB6 BAB7 BAB8 BAB9 BABIO BABII BDB0 BDB1 BDB2 BDB3 BDB4 BDB5 BDB6 BDB7

L28 504 BABI2

L11 2016 BABO BABI BABZ BAB3 BAB4 BAB5 BAB6 BAB7 BAB8 BAB9 BABIO WR (1A8) BDB0 BDB1 BDB2 BDB3 BDB4 BDB5 BDB6 BDB7

L17 2016 AO A1 A2 A3 A4 A5 A6 A7 A8 A9 A10 SJ35 (1D3) CCO CC1 CC2 CC3 CC4 CC5 CC6 CC7

P J9

L7 LS245 BDBO2 BDBI 3 BDB24 BDB35 BDB46 BDB5 7 BDB68 BDB7 9 CCO-CC7 (2B9)

BABO-BAB3 (2F11)

BABO-BABI (3G7)

BAB7 (1C2)

BDBO-BDB7 (3C7)

L31 LS138 BAB4 BAB5 BAB6 BAB7 CTC SEL (3F6) PIO SEL (3F5) CRT CONT (2E11) PRINT SEL (3E3) STAT SEL (3G7) UART SEL (3C11)

L45 LS138 RAM CRT RAM SDYCR (2F3) BEEP (3C3) SDTR (3A9)

L47 LS240 DB4 DB5 DB2 DBO DBI DB7 DB6 DB3 DBO-DB7 (2G11, 3G8) BLKCR (2F4) DRREST (3E2)

R15 4.7K +5VR

R28 470Ω

CO-C6 (2G10)

L19 157 BAB3 C3 BABI C1 BABO CO BABZ CZ A3 A1 A0 A2

L20 157 BAB4 C4 BAB5 C5 BAB8 RØ BAB6 C6 A9 A10 A8 A12

L21 157 BA9 B1 BAB11 R3 BAB12 R4 BAB10 RZ A11 A13 A15 A14

RO-R4 (2G10)

L22 LS158 A5 A4 A8 A7

L52 LS279

L40 04

L35 LS02

L57 LS02

L37 LS00

A10

J8 P

SJ25 (2B8)

NO BLINK

L46 LS74 RESET VCC TRIG OUT CNT NE 555 THR DIS GND

R46 4.7K R45 47K C64 .01uf C61 .047 uf ±0V

CLICKER (12)

R22 4.7K +5VR HSYN (2E10) (3B5)

L46 LS74 2PE 2D 2Q 2CK 2CLR

L51 155 1C 1G 1A 1B 2C 2G A BAB7 (1E6) 1Y0 1Y1 1Y2 1Y3 2Y0 2Y1 2Y2 2Y3

(18B) RD (1A8) WR L50 L500

LNO BLINK (2D10)

L46 LS74 1PR 1D 1CK 1CLR 1Q 1Q GATE

SCLK3 (2C9, 2E11)

L50 L500 WAIT (1D11)

SWMUX (2A6)

DCO-DC7 (2D11)

BDBO-BDB7 (3C7)

L8 LS245 DCO DC1 DC2 DC3 DC4 DC5 DC6 DC7

L18 2016 DCO DC1 DC2 DC3 DC4 DC5 DC6 DC7

SJ35 (2D11) (2B8) (1F3)

WANG LABORATORIES, INC. LOWELL, MASS. U.S.A.		BY	DATE	APPROVED BY	DATE
MATERIAL NONE	MODEL NO. 2336DW SEE ENGRG. SPECIFICATIONS No.	DWN Lisa Richardson	11/22/81	E ENGR	
		CHK		M ENGR	
				MFG ENGR	
FINISH NONE	TOL. EX. AS NOTED XX ± FRAC. ± XXX ± ANG. ± FINISH √	TITLE TERMINAL CONTROL BOARD SCHEMATIC			
	SCALE NONE SHT 1 OF 5	SEE CHART	D	7743	3
		WANG PART NUMBER	SIZE	DRAWING NUMBER	REV.

NO.	REVISION	DATE	BY
	SEE SHEET 5		

BRUNING 40-5253-48997

D 7743

"THIS DRAWING AND THE DATA SHOWN THEREON ARE THE CONFIDENTIAL PROPERTY OF, AND ARE PROPRIETARY TO, WANG LABORATORIES, INC. THIS DRAWING AND THE DATA SHOWN THEREON MAY NOT BE MADE PUBLIC WITHOUT THE WRITTEN CONSENT OF WANG LABORATORIES, INC. IF FOR ANY REASON THIS DRAWING IS PERMITTED BY WANG TO LEAVE THE PHYSICAL CUSTODY OF THE COMPANY, IT IS RETURNABLE UPON THE DEMAND OF WANG LABORATORIES, INC."

DO NOT SCALE

CO-C6 (1E6)
R0-R4 (1B7)
COMPOSITE SYNC
CURSOR VIDEO
BLANK
DB0-DB7 (1B8)
BAB0-BAB3 (1E6)
CHA0 (2C8)
SEL (2A6) CHA2 (2C8) CHA1 (2C8)
SEE CODE TABLE
L30 VTAC 5027
L29 2336
+5VR
R10 4.7K
GRTCONT (1E7)
SCLK3 (1B3)
+12V
±0V
HSYN (1C3)
VSYN (3C2)
LNO BLINK (1B2)
DC4L (2E4)
BLINK (2E5)
VERTICLE BLANK
VSYN (3E6)
DC0-DC7 (1D1)
SJ35 (1D3)
L16 LS373
L15 LS00
L28 S04
L39 7427
L38 S260
L27 02
L25 LS11
L41 LS378
L47 S86
L71 S02
L48 09
L49 S178
17.4MHZ (1G10)
SCLK1 (2A8)
R23 4.7K
R12 14.7K
R17 4.7K
R26 56Ω 5%
R25 470Ω 5%
R32 100Ω 5% ±0V
R27 120Ω 5%
L50 LS00
L36 LS393
VSYNC (3C2)
POR (1F11)
BLKCR (1B8)
SDYCR (1C7)
L52 279
L76 LS32
L37 LS00
BLANK (2D10)
DC4L (2D10)
L40 04
R28 4.7K
L71 S02
L38 S260
L47 S86
L27 02
L76 LS32
L26 LS32
L4 166
L3 166
L5 2516
L29 LS279
L16 LS373
L14 175
L13 160
L298
R1 4.7K
R7 4.7K
R8 4.7K
SCLK3 (1B3)
CCO-CC7 (1F1)
SJ25 (1A5)
SJ35 (1D3)
SCLK1 (2F8)
SWMUX (1B1)
SWMUX (2C7)
SEL (2F9)
CHA0 (2F9)
CHA1 (2F9)
CHA2 (2F9)
POR (1D11)
R18 5.1K 5%
R19 22Ω 5%
Q2 MPS 6514
Q3 MPS 6518
R20 1K 5%
R21 56Ω
TO CRT MONITOR
-12V

CODE TABLE 377-0442 (L29)										
IN					OUT					
HEX	D	C	B	A	6	5	4	3	2	1	Ø	HEX
Ø	0	0	0	0	0	0	1	0	0	0	0	1Ø
1	0	0	0	1	0	1	Ø	0	0	0	0	2Ø
2	0	0	1	0	0	1	Ø	0	0	1	0	24
3	0	0	1	1	0	1	Ø	0	0	1	0	24
4	0	1	0	0	0	1	Ø	0	1	0	1	25
5	0	1	0	1	0	1	Ø	0	1	0	1	25
6	0	1	1	0	0	1	Ø	0	1	1	0	26
7	0	1	1	1	0	1	Ø	0	1	1	0	26
8	1	0	0	0	0	1	Ø	0	1	1	1	27
9	1	0	0	1	1	1	Ø	0	1	1	1	67
A	1	0	1	0	1	1	Ø	1	0	1	1	6B

WANG LABORATORIES, INC. LOWELL, MASS. U.S.A.	BY	DATE	APPROVED BY / DATE
	DWN Debra Richardson 12/2/81		E ENGR
	CHK		M ENGR
			MFG ENGR
MATERIAL: NONE	MODEL NO. 2336DW; SEE ENGRG. SPECIFICATIONS; No.		TITLE: TERMINAL CONTROL BOARD SCHEMATIC
FINISH: NONE	TOL. EX. AS NOTED: XX ± FRAC. ±; XXX ± ANG. ± FINISH √	SEE CHART	D 7743 3
	SCALE NONE SHT 2 OF 5	WANG PART NUMBER	SIZE DRAWING NUMBER REV.

DATE	BY	REVISION	NO.
		SEE SHEET 5	

BRUNING 40-5253 48997

"THIS DRAWING AND THE DATA SHOWN THEREON ARE THE CONFIDENTIAL PROPERTY OF, AND ARE PROPRIETARY TO, WANG LABORATORIES, INC. THIS DRAWING AND THE DATA SHOWN THEREON MAY NOT BE MADE PUBLIC WITHOUT THE WRITTEN CONSENT OF WANG LABORATORIES, INC. IF FOR ANY REASON THIS DRAWING IS PERMITTED BY WANG TO LEAVE THE PHYSICAL CUSTODY OF THE COMPANY, IT IS RETURNABLE UPON THE DEMAND OF WANG LABORATORIES, INC."

DO NOT SCALE

PRINT ACK (10B)

DBO-DB7 (1B8)

BABO-BABI (1E6)

KS (21)

STAT SEL (1E7)

DRB2 DRB3 DRB1

SW1 3 DRB1 DRB2 DRB3 R47 4.7K

L58 L58 L58393 2CLR 2QD 2QC 2QB 2QA 2A 1A 1QD 1QC 1QB 1QA 1CLR

300 600 1200 2400 4800 9600

L59 LS151 A B C D0 D1 D2 D3 D4 D5 D6 D7 STB W Y

POR (1F11) 19200 (1F9) 19200

L62 1602 RR1 RR2 RR3 RR4 RR5 RR6 RR7 RR8 RRD DRR THRL CRL WLS2 CLR PI RI WLSI EPE SFD SBS VDD VGG VCC CK TRCK TRE TR1 TR2 TR3 TR4 TR5 TR6 TR7 TR8 FE OE PE DR TRO THRE

DBO DB1 DB2 DB3 DB4 DB5 DB6 DB7

BDBO BDB1 BDB2 BDB3 BDB4 BDB5 BDB6 BDB7

BDBO-BDB7 (1F1)

L70 LS244 1A1 1A3 1A4 1A2 2A2 2A1 2A4 2A3 1Y1 1Y3 1Y4 1Y2 2Y2 2Y1 2Y4 2Y3

DBO DB6 DB2 DB0 DB4 DB3 DB1 DB7 DB5

L63 Z80-CTC GND VCC CSØ CSI DØ RESET CE IEI IEO CK/TRI CK/TR2 CK/TR3 CK/TRO Ø RD IORQ M1 INT D0 D1 D2 D3 D4 D5 D6 D7 ZC/TOØ ZC/TO1 ZC/TO2

BABO BABI DBO DB1 DB2 DB3 DB4 DB5 DB6 DB7

POR (1D11) CTC SEL (1E7) R42 4.7K +5VR

PIO SEL (1E7) L64 Z80-PIO GND VCC B/ASEL C/DSEL DO DI CE B STB A STB B0 B2 A0 A1 A2 A3 A4 A5 A6 B4 B5 B6 B7 A7 B3 B1 ARDY BRDY IEO INT IEI MI IORQ RD

PINH (3C9) WLSI (3C10) EPE (3C10) RTS (3B7)

INT (1B11)

R43 1K R41 2.2K 5% L73 14

AET (117) UCO (24)

L72 LS373 SD 4D 6D 3D 7D 2D 8D 1D OC 5Q 4Q 6Q 3Q 7Q 2Q 8Q 1Q ENB

P0 (26) P1 (36) P2 (46) P3 (56) P4 (66) P5 (76) P6 (86) P7 (96)

L55 LS74 1PR 1D 1CK 1ICLR 1Q

PRINT SEL (1E7) PRST (1B7)

L55 LS74 2PR 2D 2CK 2CLR 2Q

KO (167) K1 (177) K2 (157) K3 (207) K4 (227) K5 (197) K6 (187)

L66 LS00

SHIFT (71) LOCK (97) SHLED (147)

R30A 4.7K R30 4.7K

L56 LS74 2PR 2D 2CK 2CLR 2Q

L54 LS393 2ICLR 2IQD 2IQC 2IQB 2IQA 2A

PSCLK (1F9) R28 4.7K

L68 LS04

PRINT STB (16)

BEEP (1C7)

VSYNC (2E6)

L54 LS393 2CLR 2QA 2QB 2QC 2QD 2A

R48 2K CW

MTI QMB-06

D4 SIL

L71 LS02 L47 LS86

R24 2.2K 5%

L69 75154 1A 1T 2A 2T 3A 3T 4A 4T VCC1 1Y 2Y 3Y 4Y

DSR (65) CTS (55) DI (35)

L68 LS04 L57 LS10

+5VR

+5VB (165) R40 2.2K 5% +5VR

+12VB (195) R51 2.2K 5% +12V

L52 LS279

SDTR (1C7)

L74 75150 1A 1Y STB 2A 2Y GND V- V+

RTS (3E3) R37 2.2K 5%

R38 4.5K

DTR (205) RTS (45)

L67 75150 1A 1Y STB 2A 2Y GND V- V+

C45 .0047uf Q3 MPS 6512 Q4 MPS 6518 R31 68Ω 1W C47 1uf 50V C46 1uf 50V

DOUT (25)

R44 4.7K R35 7.5K C48 220 pf C51 150 pf R34 4.7K

L65 9602 CX1 CX2 RX1 RX2 A1 B1 A2 B2 CLR1 CLR2 Q1 Q1 Q2 Q2

L73 14

R36 7.5K 5% R30 4.7K C49 3.3 uf 20V(T)

L60 LS93 RO1 RO2 VCC GND AIN BIN QA QB QC QD

HSYN (2E10) (1C3)

DAX (57)

BY	DATE	APPROVED BY	DATE
DWN Lisa Richardson	12/11/81	E ENGR	
CHK		M. ENGR	
		MFG ENGR	

WANG LABORATORIES, INC. LOWELL, MASS. U.S.A.

MATERIAL: NONE

MODEL NO. 2336DW

SEE ENGRG. SPECIFICATIONS No.

FINISH: NONE

TOL. EX. AS NOTED .XX ± FRAC. ± .XXX ± ANG. ± FINISH √

SCALE NONE SHT 3 OF 5

TITLE: TERMINAL CONTROL BOARD SCHEMATIC

SEE CHART | D | 7743 | 3

WANG PART NUMBER | SIZE | DRAWING NUMBER | REV.

D 7743

NO.	REVISION	BY	DATE
	SEE SHEET 5		

"THIS DRAWING AND THE DATA SHOWN THEREON ARE THE CONFIDENTIAL PROPERTY OF, AND ARE PROPRIETARY TO, WANG LABORATORIES, INC. THIS DRAWING AND THE DATA SHOWN THEREON MAY NOT BE MADE PUBLIC WITHOUT THE WRITTEN CONSENT OF WANG LABORATORIES, INC. IF FOR ANY REASON THIS DRAWING IS PERMITTED BY WANG TO LEAVE THE PHYSICAL CUSTODY OF THE COMPANY, IT IS RETURNABLE UPON THE DEMAND OF WANG LABORATORIES, INC."

DO NOT SCALE

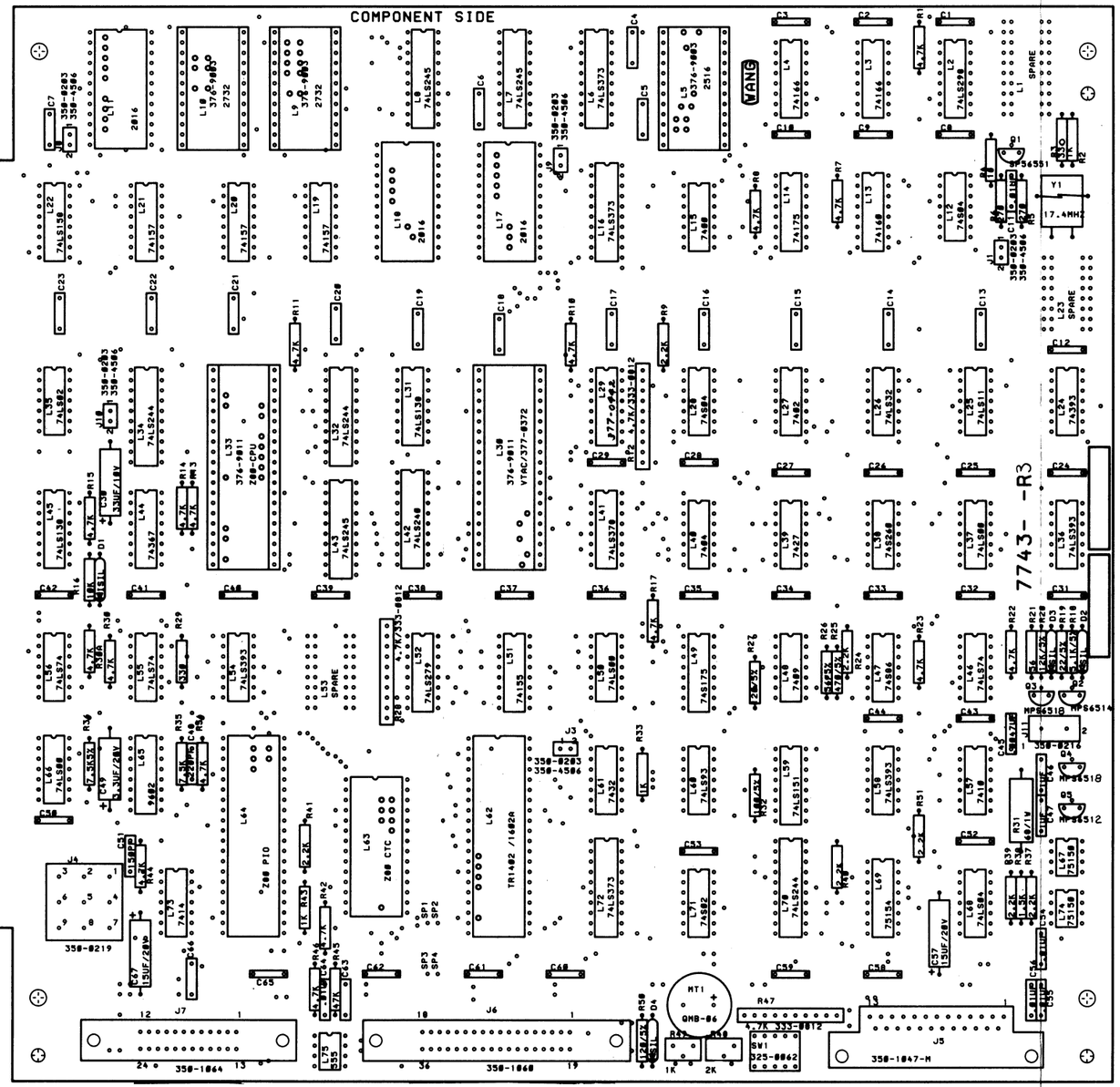

ECO
NO. 22441 D
PENDING 4-13-82

WANG LABORATORIES, INC. LOWELL, MASS. U.S.A.	BY	DATE	APPROVED BY	DATE
	DWN Lisa Richardson	12/18/81	E ENGR	
	CHK D J CORBIN	1-11-82	M ENGR	
MATERIAL	MODEL NO. 2336 DW		MFG ENGR	
	SEE ENGRG. SPECIFICATIONS No.	TITLE TERMINAL CONTROL BOARD ASSEMBLY		
FINISH	TOL. EX. AS NOTED XX ± FRAC. ± XXX ± ANG. ± FINISH ✓	SEE CHART	D	7743	3
	SCALE NTS SHT 4 OF 5	WANG PART NUMBER	SIZE	DRAWING NUMBER	REV.

NO.	REVISION	DATE	BY
	SEE SHEET 5		

D 7743

"THIS DRAWING AND THE DATA SHOWN THEREON ARE THE CONFIDENTIAL PROPERTY OF, AND ARE PROPRIETARY TO, WANG LABORATORIES, INC. THIS DRAWING AND THE DATA SHOWN THEREON MAY NOT BE MADE PUBLIC WITHOUT THE WRITTEN CONSENT OF WANG LABORATORIES, INC. IF FOR ANY REASON THIS DRAWING IS PERMITTED BY WANG TO LEAVE THE PHYSICAL CUSTODY OF THE COMPANY, IT IS RETURNABLE UPON THE DEMAND OF WANG LABORATORIES, INC."

DO NOT SCALE

I.C. LOCATION	TYPE	W.L. PART NO.
L61	7432	376-0093
L1, 23, 53	SPARE	
L2	74LS298	376-0232
L3, 4	74166	376-0109
L5	2516	SEE CHART
L6, 16, 72	74LS373	376-0310
L7, 8, 43	74LS245	376-0285
L9, 10	2732	SEE CHART
L11, 17, 18	2016	377-0430
L12, 28	74S04	376-0197
L13	74160	376-0191
L14	74175	376-0119
L15	7400	376-0002
L19, 20, 21	74157	376-0082
L22	74LS158	376-0293
L36, 54, 58	74LS393	376-0307
L25	74LS11	376-0225
L26	74LS32	376-0211
L27	7402	376-0016
L29	2336	377-0442
L30	VTAC 5027	SEE CHART
L31, 45	74LS138	376-0294
L32, 34, 70	74LS244	376-0288
L33	Z80-CPU	SEE CHART
L35	74LS02	376-0208
L37, 50, 66	74LS00	376-0207
L38	74S260	376-0206
L39	7427	376-0125
L40	7404	376-0010
L41	74LS378	376-0309
L42	74LS240	376-0297
L44	74367	376-0176
L46, 55, 56	74LS74	376-0155
L47	74S86	376-0271
L48	7409	376-0085
L49	74S175	376-0270
L51	74155	376-0049
L52	74LS279	376-0316
L57	7410	376-0003
L59	74LS151	376-0214
L60	74LS93	376-0315
L62	7402A/1602A	337-0071
L63	Z80-CTC	377-0343
L64	Z80-PIO	377-0342
L65	9602	376-0104
L67, 74	75150	376-0076
L68	74LS04	376-0180
L69	75154	376-0077
L73	7414	376-0139
L75	NE555	376-0126
L24	74393	376-0330
L71	74S02	376-0199

I.C. LOCATION	TYPE	W.L. PART NO.
L11, 17, 18	2016	377-0430
L62	UART	377-0071
L63	Z80 CTC	377-0343
L64	Z80 PIO	377-0342

COMPONENT	TYPE	W.L. PART NO.
R1, 7, 8, 10, 11, 13, 14, 15, 17, 22 23, 30, 30A, 34, 42, 44, 46	4.7K 1/4W 10%	330-3047
R2, 33, 43	1K 1/4W 10%	330-3010
R3, 29	350Ω 1/4W 10%	330-2033
R4	10Ω 1/4W 10%	330-1010
R5, 6	270Ω 1/4W 10%	330-2027
R9, 24, 37, 39, 40, 41, 51	2.2K 1/4W 5%	330-3023
R16	10K 1/4W 10%	330-4010
R18	5.1K 1/4W 5%	330-3052
R19	22Ω 1/4W 5%	330-1023
R20	12K 1/4W 5%	330-4013
R21	56Ω 1/4W 10%	330-1056
R25	470Ω 1/4W 5%	330-2048
R26	56Ω 1/4W 5%	330-1057
R27	120Ω 1/4W 5%	330-2013
R12, 28, 47	4.7K SIP NETWORK	333-0812
R31	68Ω 1W 10%	332-1068
R32	100Ω 1/4W 5%	330-2011
R35	7.5K 1/4W 10%	330-3075
R36	7.5K 1/4W 5%	330-3076
R38	1.5K 1/4W 10%	330-3015
R45	47K 1/4W 10%	330-4047
R48	2K POT	336-1022
R49	1K POT	336-1014
R50	120Ω 1/4W 10%	330-2012
C1-10, 12-29, 31-44, 50, 52, 53, 58-63, 65, 66	.047uf CER	300-1966
C11, 54-56, 64	.01uf CER	300-1903
C30	33uf 10V TANT	300-4024
C46, 47	1uf, 50V	300-1931
C48	220 pf	300-1220
C49	3.3uf 20V TANT	300-4082
C51	150 pf CER	300-1150
C57, 67	15 uf 20V TANT	300-4022
C45	.0047uf CER	300-1910
L5, 9, 10	24 PIN SOCKET	376-9003
L30, 33, 62,	40 PIN SOCKET	376-9011

COMPONENT	TYPE	W.L. PART NO.
J1, 3, 8, 9, 10	2 PIN CONN	350-0203
J4	9 PIN CONN	350-0219
J5	25 PIN CONN	350-1047
J6	36 PIN CONN	350-1060
J7	24 PIN CONN	350-1064
J11	2 POS CONN	350-0216
D1, 2, 3, 4	DIODE, STL	380-1004
Q1	SPS 6551	375-1050
Q2	MPS 6514	375-1062
Q3, 4	MPS 6518	375-1014
Q5	MPS 6512	375-1012
P1, 3, 8, 9, 10	SHUNT, 2 POS	350-4506
SW1	SWITCH 5 BANK	325-0062
MT1	TRANSDUCER QMB-06	320-0304
Y1	17.4 MHZ CRYSTAL	321-0029

TYPE	IC LOCATION	SPARES
74S04	L28	2
74LS04	L68	2
7410	L57	1
74LS32	L26	
74S86	L47	1

MNEMONICS	COORD
AET	3G1
CLICKER	1A7
CTS	3B11
DAX	3A4
$\overline{DI}$	3B11
DOUT	3A5
DSR	3B11
DTR	3A6
K0-K6	3E1
$\overline{K5}$	3A6
$\overline{LOCK}$	3D1
P0-P7	3G1
$\overline{PRINTACK}$	3G4
$\overline{PRINT\ STB}$	3C1
RTS	3A6
SHLED	3D1
$\overline{SHIFT}$	3D1
UCO	3G1

RS232

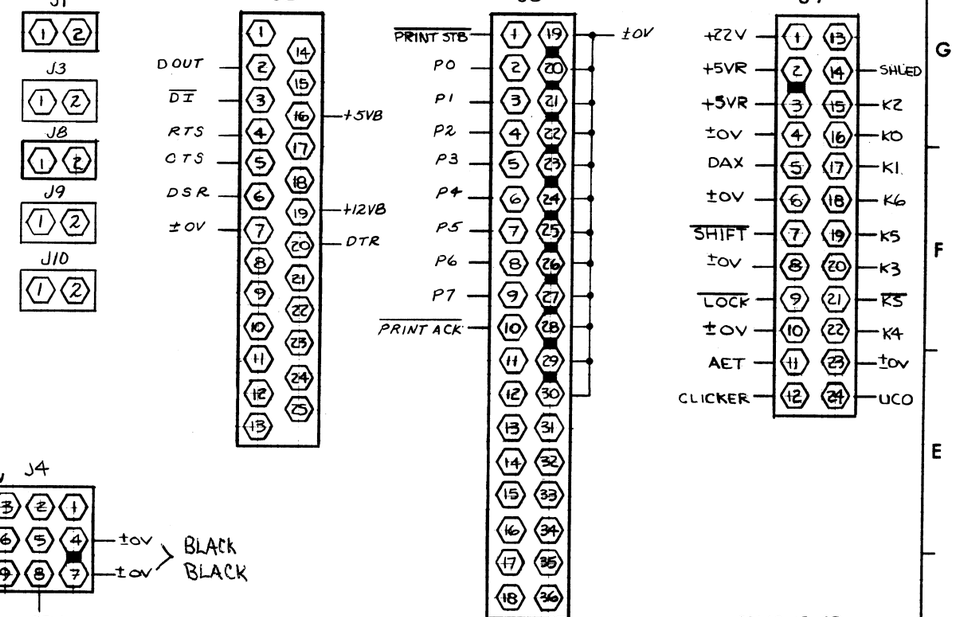

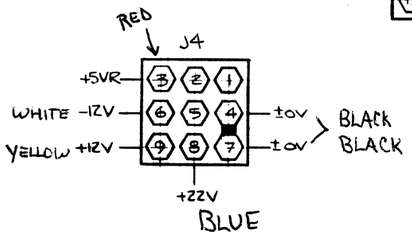

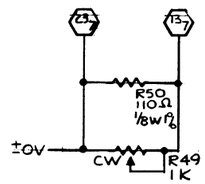

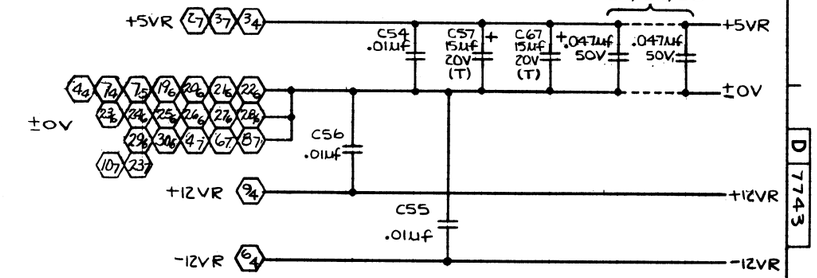

C1-10, 12-29
31-44, 50, 52
53, 58-60, 62,
63, 65, 66

210 = 209 + 377 OR 378							
210	209	L5	L9	L10	L30	L33	
7743-A	7743	378-5080	378-6013	378-6014	377-0372	377-0344	DW
		5080	-6013	-6079			DE

E-REV

NO.	REVISION	BY	L.M.R	P.G.D	FSS	D.S.
0	ORIGINATED PER DWR # E1405 APP'D: D.F. CORBIN		12/18/81	2-11-82	3-4-82	4-5-82
1	REVISED PER ECO # 220332 APP'D: DJS 2/11/82					
2	REVISED PER ECO # 220349 APP'D: [illegible]					
3	REVISED PER ECO: 226422821 APP'D: [illegible] 7/1/82					

BRUNING 40-5253 4/80/12

WANG LABORATORIES, INC. LOWELL, MA U.S.A.	BY	DATE	APPROVED BY	DATE
	DWN Lisa Richardson	12/18/81	E ENGR P.F. Sm.	4/4/82
	CHK D.J. CORBIN	1-11-82	M ENGR	
			MFG ENGR	

MATERIAL	MODEL NO.	TITLE
NONE	2336 DW	TERMINAL CONTROL BOARD
FINISH: NONE	SEE ENGRG. SPECIFICATIONS No.	TOL. EX. AS NOTED .XX ± FRAC. ± .XXX ± ANG. ± FINISH √
	SCALE NONE	SHT 5 OF 5

SEE CHART	D	7743	3
WANG PART NUMBER	SIZE	DRAWING NUMBER	REV.

D 7743

THE INFORMATION CONTAINED IN THIS DRAWING IS THE PROPERTY OF WANG LABORATORIES, INC., AND IS CONFIDENTIAL AND PROPRIETARY TO WANG LABORATORIES, INC.. IT MAY NOT BE COPIED, REPRODUCED OR USED IN WHOLE OR IN PART FOR ANY REASON.

MILLIMETERS IN PARENTHESIS.
TOLERANCES TO BE EQUIVALENT TO INCH DIMENSIONS.

DO NOT SCALE

EXTERNAL
CONTRAST
VIDEO IN
250Ω CW
VIDEO ±0V
NOT LOADED FOR 7456-2

VIDEO IN (S) C1 10μF 16V R1 100Ω ½W VIDEO ±0V (R)

R2 2.2K R3 4.7K R9 1.2K D1 IN752A

L2 NE 592 — 1 IN1, 2 IN2, 5 V-, 4 G1B, 11 G1A, 10 V+, 8 OUT1, 7 OUT2

R5 680Ω

+12V
R8 150Ω
D4 **
C2 35μF 15V
C15 15μF 20V
MPS-U09 Q2 **
D10 **
±0V
C32 47PF
MPS 6518 Q5 **
R40 470Ω **
R10 470Ω
MPS-6512 Q1 **
R9 470Ω
R44 47Ω
C3 820 pf
R11 22Ω
±0V

VARIATION CHART			
COMP	7456	7456-1	7456-2
R19	330-3068	330-4027	330-3063
C30	300-2412	300-2417	300-2412
C31	300-2413	300-2418	300-2413
Z2	320-0053	320-0056	320-0053
Z3	320-0051	320-0058	320-0051
HOR.YOKE	320-0052	320-0057	320-0052
FLY-BACK	410-1007	410-1008	410-1007
R5	330-2068	330-2068	330-3068
* V YOKE L	YEL	BLU	YEL
* V YOKE K	BLU	RED	BLU
* H YOKE H	RED	YEL	RED

*COMPONENTS NOT LOADED FOR 7456-2	
R9,10,40	330-2047
R1	331-2010
R11	330-1022
R12	337-3012
R44	330-1047
C3	300-1820
C15	300-4022
Q5	375-1014
Q2	375-1056
D4,10	380-1001
C32	300-1047
Q1	375-1012

VERT. HOLD R15 100K CW C5 0.15MF R16 100K
R14 1K
R13 5Ω 2W C6 1000MF 25V ±0V
IN4004 D2
9.1V D3 IN757 ±0V
R41 27K
R17 220Ω C7 100MF 25V ±0V
L3 TDA 1044
R18 5K VERT. LINEARITY — SEE VARIATION CHART
R19
R20 220K .02MF/400V 220Ω
R21 10Ω
R22 22K VERT. SIZE
R23 15K C9 470PF
C10 35MF 15V
R24 20Ω R25 2.2Ω 1/2W
C11 1000MF 25V
V YOKE * K L
EXTERNAL
VERT. YOKE
TP2 (11)
R42 18K
±0V

+12V
R30 6.8K
C21 .1MF 20V
R31 4.7K
C22 12MF 35V
C23 .1MF 20V
L1 TBA 950
TP1 (12)
R37 9.7K
R38 10K SEE CHART
T1
BU124 Q4
D9 SIF15
C30 SEE VARIATION CHART
Q3 2N3725
C28 5600PF
R6 47Ω
R39 97Ω
C29 .47MF 100V
R7 33Ω 1W
C24 10MF 15V
R32 180Ω
C25 .01MF 50V
R33 5K CW HOR. HOLD
C26 MYLAR .47MF 100V
R36 68Ω
R35 10K PHASE
R34 8.2K 1/2W
C27 35MF 16V
±0V (D) (E) (F)

R12 1.2K 2W **

EXTERNAL
* IN CRT SOCKET LEAD
340-0101
VIDEO OUT (P)
* YEL 270Ω BRN
BLK ±0V
+12V (9)
* 1K GRN
* 1K RED
* 1K ORN
SEE NOTE 1:
G1 (N) FOCUS (M) G2 (10) G2 (B)
DYNAMIC FOCUS
C4 .02 ±0V CW
R26 1.2 MEG.
C13 .02MF 1400V
VG1 X D5 FB-5 (1)
SEE CHART
HG17
R27 100K
R28 2.5 MEG FOCUS
C12 .0027MF 40-80MA 600V
C14 .1MF 400V ±0V
C16 5600PF ±0V
R29 270K
BRIGHTNESS
BRIGHT BOTTOM (13) D6 SIF4 FB-6 (3)
BRIGHT CENTER (14) 220K CW
C17 .02MF 600V ±0V
C18 .22MF MYLAR
EXTERNAL R43 68K
BRIGHT TOP (15) D7 VG1 X FB-8 (4)
FB-1 (6)
C19 50MF 50V ±0V
D8 3SIF2
C20 1000MF 25V ±0V
FB-3 (5)
H YOKE * (H) (2)
FB-2 (7)
C31 SEE VARIATION CHART
Z2 WIDTH
Z3 HOR. LINEARITY
J H YOKE BLK
HOR. YOKE SEE VARIATION CHART

NOTES:
1. CONNECT G2 LEAD TO PIN B UNLESS UNABLE TO ACHIEVE RASTER CUT OFF.

IC. LOCATION	W. L. PART NO	±0V
L1	376-0260	1
L2	376-0239	5
L3	376-0261	13

HOLE LEGEND & TOLERANCES	
HOLE DIA	TOLERANCE
.035 - .125	+.003 -.001
.126 - .250	+.004 -.001
.251 - .500	+.005 -.001

SYM.	DESCRIPTION	QTY.
A		

SIGNAL DESIGNATIONS - VIEW FROM BOTTOM (WIRING) SIDE OF CONNECTOR

	(A) 1	FB-5
G2	(B) 2	
	(C) 3	FB-6
±0V	(D) 4	FB-8
±0V	(E) 5	FB-3
±0V	(F) 6	FB-1
H-YOKE - *	(H) 7	FB-2
H-YOKE - BLK	(J) 8	+12VR
V-YOKE - *	(K) 9	+12VR
V-YOKE *	(L) 10	G2
FOCUS	(M) 11	TP2
G1	(N) 12	TP1
VIDEO OUT	(P) 13	BRIGHT BOTTOM
VIDEO ±0V	(R) 14	BRIGHT CENTER
VIDEO IN	(S) 15	BRIGHT TOP

COMP SIDE — WIRING SIDE

COMP.	W. L. PART No.
R2	330-3022
R3,37	330-3047
R4	330-3012
R14	330-3010
R9	330-2068
R6,39,44	330-1047
R8	330-2015
R10,40	330-2047
R12	337-3012
R13	337-1056
R15	336-1019
R16,27,38	330-5010
R17,21	330-2022
R1	331-2010
R30	330-3068
R20	330-5022
R11	330-1022
R22	330-4022
R23	330-4015
R24	336-1021
R25	331-0022
R26	330-6012
R28	336-0031
R29	330-5027
R31	330-6047
R32	330-2018
R18,33	336-1020
R34	333-0067
R35	336-1015
R36	336-1068
R7	332-1033
R41	330-4027
R42	330-4018
D1	380-2056
D2	380-4000
D3	380-2091
D3.7	380-3009
D6,9	380-3010
D8	380-3012
D4,10	380-1001
Z1	320-0054
R43	330-4068

COMP.	W. L. PART No.
C1,24	300-3006
C2,10,27	300-3009
C3	300-1820
C9	300-1470
C12	300-2415
C26,29	300-2247
C14	300-2310
C16,28	300-1915
C19	300-3010
C21,23	300-1918
C22	300-4000
C25	300-2414
C18	300-2418
C4,8,17	300-1912
C5	300-2215
C6,11,20	300-3062
C7	300-3033
C13	300-1916
C32	300-1047
Q1	375-1062
Q2	375-1056
Q3	375-1027
Q4	375-1057
Q5	375-1019
C15	300-4022
T1	410-1006

E-REV 7456: 5 — E-REV 7456-1: 5 — E-REV 7456-2: 1

7456 PC BOARD
R15 R18 R24 R35 R33 R28 Z2 WIDTH Z3 HOR. LINEARITY L3 L2 Q5 Q2 Q1 Q3 Q4 Z1 DYNAMIC FOCUS T1
SRPNMLKJHFEDCBA
ESNRLH9876543 21

NO.	REVISION	DRAWN BY	DATE	APP'D BY	DATE
9	DWR # 5398	DWR	8-31-77		
8	REVISED PER ECN # 7776	BP	12-10-77		
7	REVISED PER ECN # 8519	AF	7-7-78		
6	REVISED PER ECN # 9341	AT	7-28-78		
5	REVISED PER ECN # 10681	KEP	3-12-79	LB	5-3-79
4	REVISED PER ECN # 10935	LB	5-3-79	G.D.	5-29-79
3	ECN # 11119	G.D.	5-29-79	RJD	10-10-79
2	REVISED PER ECN # 13020, 13021	RJD	10-10-79	DEF	10-3-80
1	REVISED PER ECN # 13947	DEF	10-3-80	RJD	10-24-80
0	REVISED PER ECN # 14938	RJD	10-24-80	L.D.	1031-80
1	REVISED PER ECN # 14970	L.D.	10-31-80	AB	12-2-80
2	REVISED PER ECN # 17052	AB	12-2-80	MDB	6/4/81
3	REVISED PER ECO # 19444	MDB	6/4/81		

QTY.	ITEM	WANG PART NO.	DRAWING NO.	DESCRIPTION
NEXT ASSY.				

WANG LABORATORIES, INC. TEWKSBURY, MASS. U.S.A.

MATERIAL

FINISH

MODEL NO. 9" & 12" WANG MONITOR
SEE ENGRG. SPECIFICATIONS
No.

TOL. EX. AS NOTED
.XX ± FRAC. ±
.XXX ± ANG. ± FINISH √
SCALE -/- SHT / OF /

	BY	DATE	APPROVED BY	DATE
DWN	BP	8-31-77	E ENGR	R.Solomon 10-21-77
CHK	G.D.	10-21-77	M ENGR	
			MFG ENGR	

TITLE: ELECTRONICS FOR 9" AND 12" MONITOR

SEE CHART | D | 7456 | 12
WANG PART NUMBER | SIZE | DRAWING NUMBER | REV.

COMMENT SHEET

PLEASE COMPLETE ITEMS 1 - 8

FROM

(1) NAME
(2) DEPARTMENT
(3) STREET ADDRESS
(4) CITY AND STATE

MANUAL INFORMATION

(5) MANUAL TITLE
(6) REORDER NO.
(7) REVISION LEVEL

EQUIPMENT INFORMATION

(8) EQUIPMENT NO. AND DESCRIPTION

COMMENTS

THIS FORM IS NOT INTENDED TO BE USED AS AN ORDER BLANK. YOUR EVALUATION OF THIS MANUAL WILL BE WELCOMED. ANY ERRORS, SUGGESTED ADDITIONS OR DELETIONS, OR GENERAL COMMENTS MAY BE MADE ABOVE. PLEASE INCLUDE REFERENCES TO FIGURE NUMBERS, PAGE NUMBERS ETC.

NO POSTAGE STAMP NECESSARY IF MAILED IN U.S.A.

CUSTOMER ENGINEERING, PRODUCT SUPPORT, TECHNICAL DOCUMENTATION

WANG

Fold

NO POSTAGE
NECESSARY
IF MAILED
IN THE
UNITED STATES

BUSINESS REPLY CARD

FIRST CLASS PERMIT NO. 16 LOWELL, MA

POSTAGE WILL BE PAID BY ADDRESSEE

CUSTOMER ENGINEERING
WANG LABORATORIES, INC.
ONE INDUSTRIAL AVENUE
LOWELL, MASSACHUSETTS 01851

ATTENTION: TECHNICAL WRITING DEPARTMENT M/S 8237 LAWRENCE

Fold

Printed in U.S.A.
13-6720B
9-81-45M

WANG LABORATORIES, INC.
ONE INDUSTRIAL AVENUE, LOWELL, MASSACHUSETTS 01851, TEL. (617) 459-5000, TWX 710 343-6769, TELEX 94-7421

PRINTED IN U.S.A.